May | June 2011

CONCRETE MASONRY DESIGNS

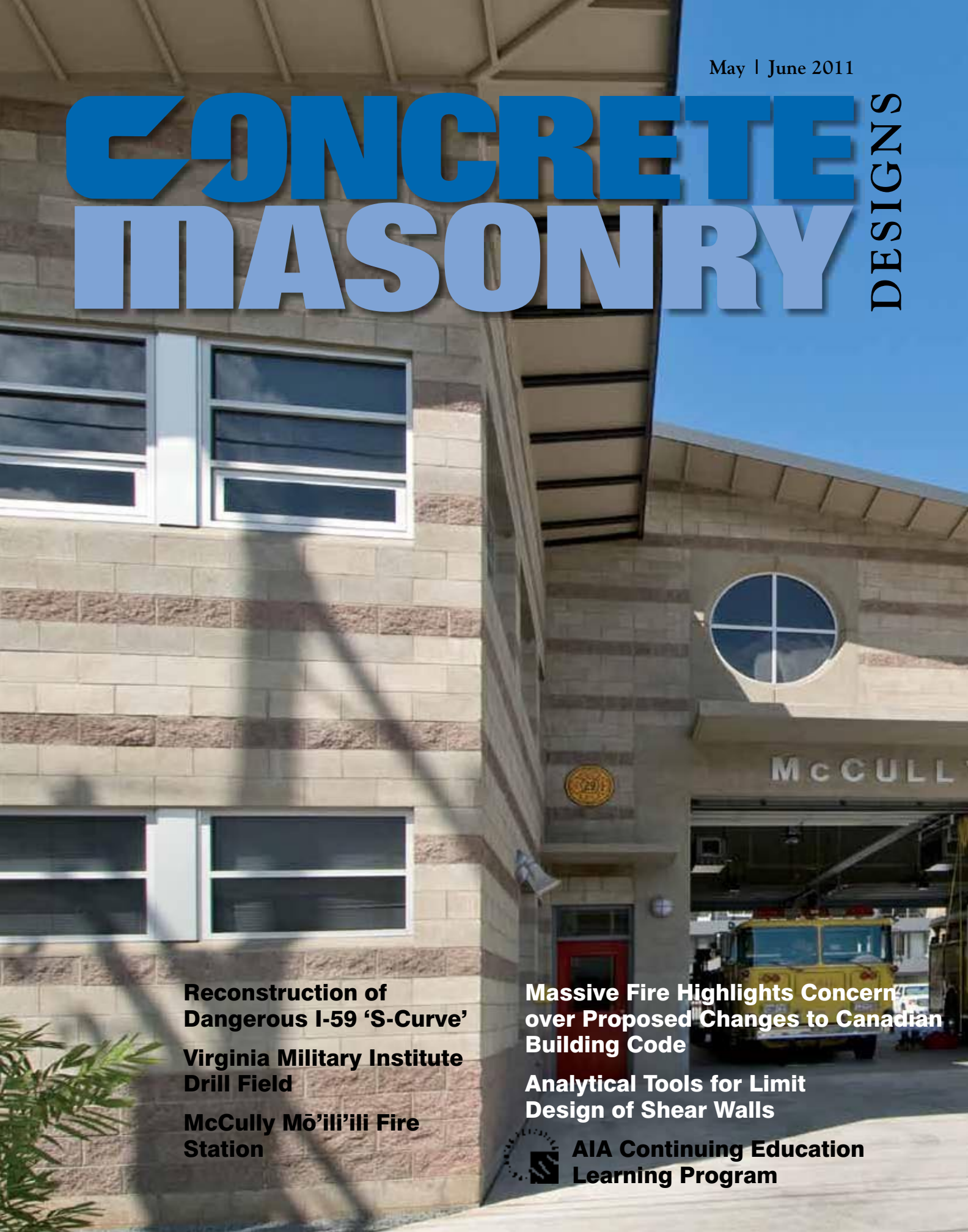

Reconstruction of Dangerous I-59 'S-Curve'

Virginia Military Institute Drill Field

McCully Mō'ili'ili Fire Station

Massive Fire Highlights Concern over Proposed Changes to Canadian Building Code

Analytical Tools for Limit Design of Shear Walls

AIA Continuing Education Learning Program

Beautiful. Distinctive.
Homeowner Approved.

More than just a pretty face.

It's true. It's not just breathtaking natural beauty and elegance that make a Keystone wall remarkable. It's what you don't see that makes a big difference. Our pin connection system affords you unmatched design versatility, strength, and ease of installation. **With Keystone** – you can easily create your very own backyard paradise.

KEYSTONE® GREEN SOLUTIONS

KEYSTONE® RETAINING WALL SYSTEMS
A CONTECH COMPANY

To view Keystone's complete line of innovative products and project ideas, visit us online at ***www.keystonewalls.com/adcm.html*** *or call 1-800-747-8971. Keystone is proud to be a subsidiary of CONTECH Construction Products Inc.*

CONCRETE MASONRY DESIGNS

May | June 2011

4 Reconstruction of Dangerous I-59 'S-Curve'
The Laurel S-Curve reconstruction project was named winner of the People's Choice Award in the national America's Transportation Award competition.

8 Virginia Military Institute Drill Field
Virginia Military Institute (VMI) converted an unusable valley on its Lexington, VA, campus to a drill field and shooting range complex.

10 McCully Mō'ili'ili Fire Station
The new McCully Mō'ili'iliFire Station fulfills the needs of the firefighters and the surrounding neighborhood.

14 Massive Fire Highlights Concern over Proposed Changes to Canadian Building Code
Recent fires in homes with mid-rise wood frame buildings have brought into focus the issue of fire safety in residential neighborhoods.

29 NCMA/ICPI Design Award Call for Entries

33 Analytical Tools for Limit Design of Shear Walls

34 NCMA/ICPI Safety Award Program Winners

17 TEK 5-5B, Integrating Concrete Masonry Walls with Metal Building Systems

19 TEK 18-1B, Evaluating the Compressive Strength of Concrete Masonry

36 News

40 Marketplace

43 AIA Continuing Education Learning Program

Concrete Masonry Designs magazine show-cases the qualities and aesthetics of design and construction using concrete masonry.

Concrete Masonry Designs is devoted to design techniques using standard and architectural concrete masonry units, concrete brick, unit concrete pavers, segmental retaining walls, and other concrete masonry products around the world. We welcome your editorial comments, ideas, and submissions.

Copyright 2011 by the National Concrete Masonry Association. All rights reserved. Contents may not be reprinted or reproduced without written permission from NCMA.

Concrete Masonry Designs is published monthly by the National Concrete Masonry Association (NCMA), and distributed to advance and support the concrete masonry and hardscape industry and public interest.

NATIONAL CONCRETE MASONRY ASSOCIATION
Sustainable Concrete Products for Structures and Hardscapes

Send address corrections and subscription inquiries to:
NCMA Sales and Marketing Department
13750 Sunrise Valley Drive
Herndon, VA 20171-4662
703-713-1900
Fax 703-713-1910
www.ncma.org

Publisher:
Robert D. Thomas

Editor:
Mary Arntson-Terrell, mterrell@ncma.org

Associate Editors:
Dennis W. Graber, P.E.
Harry W. Junk
Gabriela Mariscal

Advertising:
Heidi Weiss, hweiss@ncma.org

"IT'S A PRESTIGIOUS AWARD AND IT'S COMING FROM A NATIONAL ORGANIZATION. THIS PROJECT IS A TESTAMENT OF EVERYONE'S WILLINGNESS TO WORK TOGETHER."

Brent Quick, Mississippi Department of Transportation (MDOT) Resident Engineer

RECONSTRUCTION PROJECT IS A WINNER

LAUREL S-CURVE

The Laurel S-Curve reconstruction project was named winner of the People's Choice Award in the national America's Transportation Award competition. The project received more than 270,000 votes by people of Mississippi, who delivered a landslide victory in the contest, sponsored by the American Association of State Highway and Transportation Officials (AASHTO). The Laurel S-Curve was named a regional winner of the America's Transportation Award and competed with other regional winners across the U.S. for the People's Choice Award.

"The purpose of this competition was to increase awareness and support of transportation, and Mississippi has demonstrated a keen appreciation for the role of highways and bridges in our everyday life," said Larry L. "Butch" Brown, MDOT Executive Director and former President of AASHTO. "Thank you to all who voted, and a special thank you to the men and women who were on the front lines of this project, guiding it through a long development process to successful completion."

MDOT reconstructed and realigned a 3,700-foot (1,128 m) segment of I-59 through Laurel, Mississippi, eliminating the notorious Laurel S-curve, which had one of the highest crash rates in the state. The reconstructed segment crosses six local streets and the Norfolk Southern Railroad, requiring a 1,980-foot-long (604 m), six-lane bridge, along with a total of 1,350 feet (411 m) of elevated ramp structures, two on-ramps, and one off-ramp.

PROJECT LOCATION
Laurel, MS
PROJECT OWNER
Mississippi Department of Transportation
PROJECT ENGINEER
Tanner Construction, Laurel, MS
SRW DESIGN/BUILD CONTRACTOR
Synergy Earth Systems, LLC, Daphne, AL
SRW PRODUCER
Block USA, Montgomery, AL
SRW LICENSOR
Tensar International Corporation, Atlanta, GA

The dangerous 3,700-foot (1,128 m) stretch of I-59 was constructed prior to adoption of current Interstate standards and wove through urban obstacles. Motorists were confronted with sharp curves, narrow lanes, low clearances, no shoulders, and inadequate merge areas. This prompted city officials to look into improving the "Laurel S-Curve" over 20 years ago.

A location committee, consisting of MDOT and FHWA representatives, met in early 1986 to review the project and develop alternatives. In 1988 the environmental assessment was completed. The result of the study was a plan to relocate Interstate 59 through the Laurel Housing Authority units on Beacon Street to straighten out the alignment. The process of moving the 72 housing units was lenghty, and construction on the replacement units was started six years later in 2002. At this point MDOT hired an engineering consulting firm to re-evaluate the design of the S-curve project using current traffic data. From 2004 to 2005, construction plans evolved based on current traffic data, public hearings, and more economical building options. The underground structure work for the bridge supports began in July 2006—20 years after the process began.

Now that the project has been completed, it has dramatically improved safety, smoothed traffic f ow, and was ultimately delivered under budget. In fact, design changes, proactive coordination, and innovative financing produced a budget surplus of $6 million, which is being used to widen five additional I-59 bridges and two additional miles of roadway north of the S-Curve.

How Did they Do It?

The new highway design called for a segmental retaining wall to be used beneath one of the bridge abutments and along the side of the highway. The Mississippi DOT (MDOT) saw the aesthetic and economic benefits of using a segmental retaining wall system over other wall types. MDOT also selected a section of highway near the segmental block wall that would utilize a wire faced temporary wall system.

Steven Parker, project manager, said that that the first priority was to correct the slopes between the avenues to

the required specifications and complete the lane widening process. "These modular block walls allow MDOT to obtain the required slopes without acquiring additional right-of-way. Two more walls are scheduled to be installed around the Highway 84 connection in the upcoming months," added Parker.

The SRW system selected has proven performance in critical live-load applications for highway bridges and abutments. The bridge abutments were installed on drilled shafts as recommended by AASHTO standards. The SRW units were created to have a compressive strength of 4,000 psi (28 MPa) and 6% absorption (state required).

During the design of the segmental block wall, the SRW contractor and the project engineer were able to work together to incorporate a backfill material that was much more cost effective that the standard #57 Stone used on most DOT projects. This allowed for some cost savings and reduced the chance of delays due to a local shortage of #57 Stone.

MDOT had a concern about the possibility of the soil behind the abutment backwall pushing enough to cause the drilled shafts beneath the abutment to move. The SRW contractor proposed the use of a welded wire form pressure relief wall behind the abutment backwall to reduce the soil pressures on it.This proposal was accepted by MDOT and incorporated into the design.

The final wall drawings called for about 10,000 sf (929 m^2) of segmental block wall and about 1,500 sf of wire faced walls.

Cause for Celebration

After the project won the regional AASHTO award, officials encouraged people to become excited and take part in the nationally recognized People's Choice Award selection process. A rally was held on the steps of Laurel City Hall where they told the crowd that they could bring national recognition to the local project.

Among the speakers was State Rep. Omeria Scott, District 80. "This project is deserving of recognition," Scott said, adding that appreciation also goes to the state's appropriations committee for its assistance. "This project is already a winner. …It's made a difference in the lives of the people here."

NCMA/AASHTO RECOMMENDATIONS

The featured project was designed following the allowable stress design methodology for Mechanically Stabilized Earth (MSE) from AASHTO, most states have now transitioned to the Load and Resistance Factor Design (LRFD) design methodology that will be included in the next version of the specifications. AASHTO has specific requirement for materials and geometry of the structure that vary from NCMA's current recommendations.

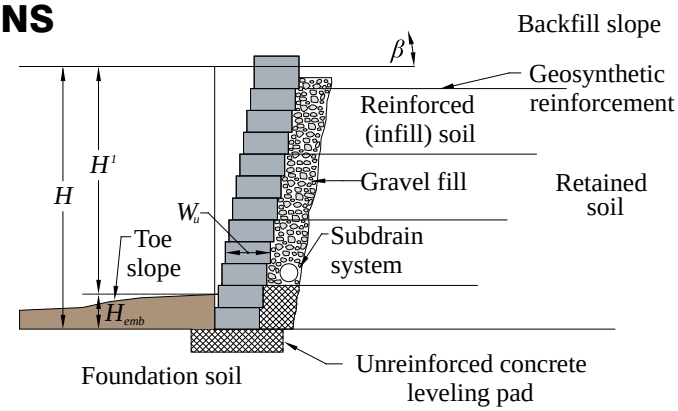

H = total (design) height of wall
H^1 = exposed height of wall
H_{emb} = wall embedment depth
L = minimum length of geosynthetic reinforcement, including facing connection
W_u = width of segmental retaining wall unit
β = backslope angle from horizontal

Some of the basic differences are:

Geosynthetic reinforcement length:
- AASHTO—Minimum of the greater of 70% of the wall height or 8 ft
- NCMA—Minimum of the greater of 60% of the wall height or 4 ft

  Notes—Structures with slopes or surcharges will require longer reinforcements.

Embedment depth:
- AASHTO—1foot
- NCMA—6 inches

  Notes—Slopes, erosion or scour potential in the front of the wall will increase the embedment depth.

Leveling pad:
- AASHTO—Unreinforced lean concrete
- NCMA—Compacted gravel pad

Reinforced fill:
- AASHTO—Recommended granular material with less than 15%, passing the No. 200 sieve (0.075 mm) and PI (plasticity index) of 6 or less
- NCMA—Allows for soils with up to 35% fines and PI of 20 or less

SRW Units:
- AASHTO—Minimum compressive strength of 4,000 psi (28 MPa) and absorption of 5% max
- NCMA—ASTM C1372 minnimum

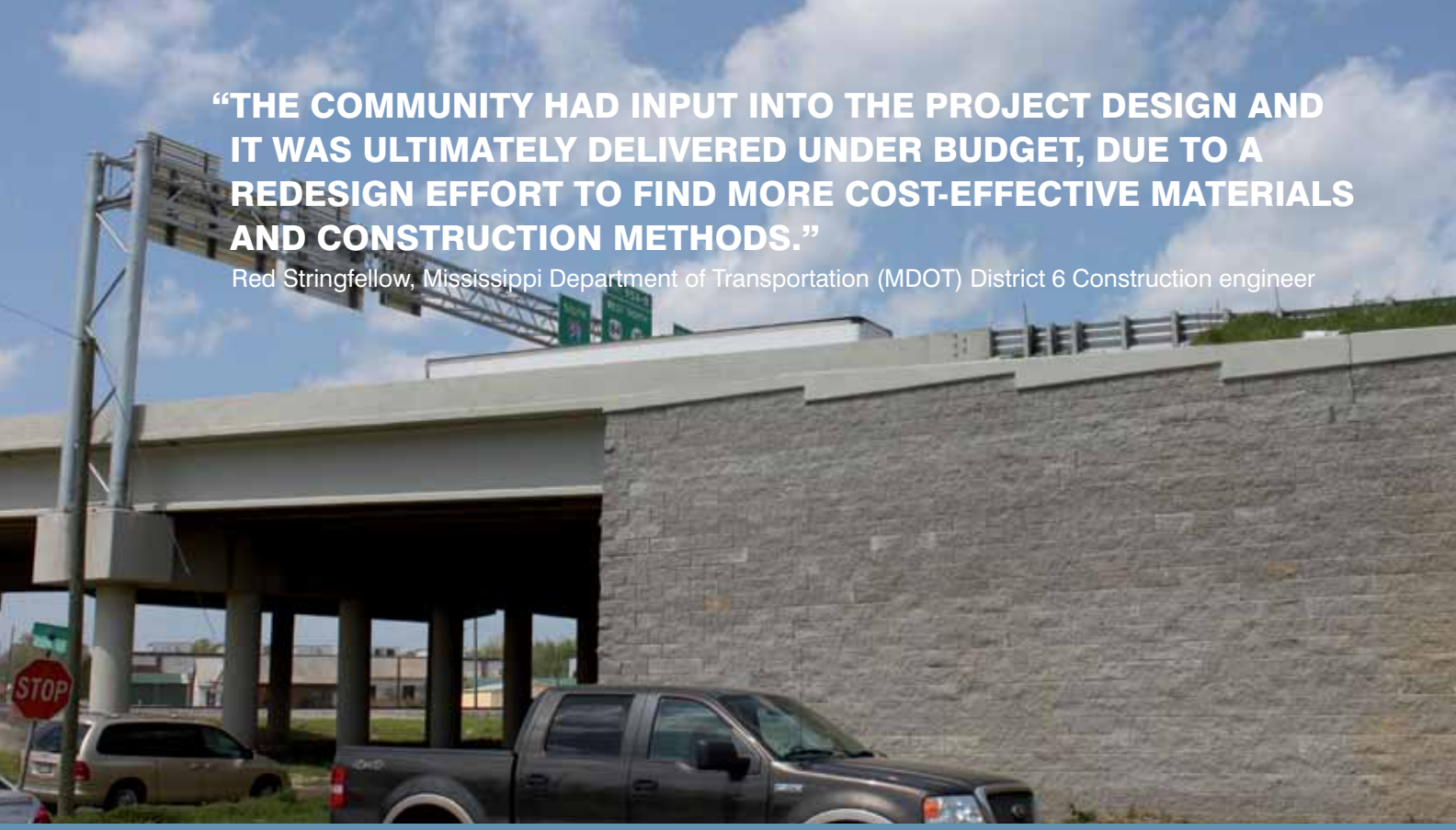

"THE COMMUNITY HAD INPUT INTO THE PROJECT DESIGN AND IT WAS ULTIMATELY DELIVERED UNDER BUDGET, DUE TO A REDESIGN EFFORT TO FIND MORE COST-EFFECTIVE MATERIALS AND CONSTRUCTION METHODS."

Red Stringfellow, Mississippi Department of Transportation (MDOT) District 6 Construction engineer

BASIC LRFD DESIGN STEPS FOR MSE WALLS

Step 1 Establish Project Requirements including all geometry, loading conditions (permanent, transient, seismic, etc.), performance criteria, and construction constraints

Step 2 Establish Project Parameters evaluate existing topography, site subsurface conditions, reinforced wall fill properties, and retained backfill properties

Step 3 Estimate Wall Embedment Depth, Design Height(s), and Reinforcement Length

Step 4 Define nominal loads

Step 5 Summarize Load Combinations, Load Factors, and Resistance Factors

Step 6 Evaluate External Stability
- a. Evaluate sliding
- b. Evaluate eccentricity
- c. Evaluate bearing on foundation soil
- d. Settlement analysis (at service limit state)

Step 7 Evaluate Internal Stability
- a. Select type of soil reinforcement
- b. Define critical failure surface (for selected soil reinforcement type)
- c. Define unfactored loads
- d. Establish vertical layout of soil reinforcements
- e. Calculate factored horizontal stress and maximum tension at each reinforcement level
- f. Calculate nominal and factored long-term tensile resistance of soil reinforcements
- g. Select grade (strength) of soil reinforcement and/or number of soil reinforcement elements at each level
- h. Calculate nominal and factored pullout resistance of soil reinforcements, and check established layout
- i. Check connection resistance requirements at facing
- j. Estimate lateral wall movements (at service limit state)
- k. Check vertical movement and compression pads

Step 8 Design of Facing Elements

Step 9 Assess Overall Global Stability

Step 10 Assess Compound Stability

Step 11 Design Wall Drainage Systems.
- a. Subsurface drainage
- b. Surface drainage

From: Design and Construction of Mechanically Stabilized Earth Walls and Reinforced Soil Slopes—Volume I , Federal Highway Administration, (FHWA NHI-10-024) CMD

THE PROBLEM

Virginia Military Institute (VMI) wanted to convert an unusable valley on its Lexington, VA, campus to a drill field and shooting range complex.

VIRGINIA MILITARY IN

THE SOLUTION

A 34-foot-tall (10.36 m) segmental retaining wall over a quarter-mile long holding up over 100,000 cubic yards (76,455 cubic meters) of fill to create a 6-acre (2.42 hectare) level field.

The $17 million complex comprises three drill fields measuring about 1,200 ft. by 200 ft. (365 by 61 m) each. The center field has synthetic turf and lighting to allow for year-round use. The outer two fields are both natural turf. In addition, there is an obstacle course and baffled firing range with 30 positions. Besides the large wall, there are several smaller decorative walls on the site.

SRW Solution Less Expensive Option

According to Lt. Col. Keith Jarvis, deputy director of construction for VMI, the wall design went through several permutations before they settled on a segmental retaining wall system. "It was vastly less expensive to build than a poured concrete retaining wall," Jarvis noted. "The cost savings played a huge part in the selection. We chose the type and the weathered look of the stone because it matched existing stone on site and gave us a rustic fieldstone look."

The project began in October 2009, and the final touches on landscaping will be completed in Spring 2011. The main wall took about seven months to erect and comprises nearly 50,000 square feet (4,645 square meters) of block. The natural-turf drill fields won't be used until August to allow the grass to take hold. The firing range and obstacle course are already in use.

Jerry DeVault, project manager with general contractor Branch & Associates, Inc. of Roanoke, VA, says his firm is experienced with large retaining walls, but even by their standards, he adds, "this one's pretty massive."

The site presented some challenges as well. "There's a river, then a hill beside it that drops down to a creek—this horrible place that was like a little valley", explained DeVault. "We built the wall and leveled off the top of the hill, then moved about 100,000 cubic yards (76,455 cubic meters) of fill behind the wall. Some rock had to be blasted out also."

Besides a poured-in-place concrete wall, says DeVault, "We looked at a few different products, including large blocks that have to be set with a crane. But it came down to price, and SRW units wound up being cheaper per square-foot installed. The height could be matched, and it looks great."

The walls were built on a crushed-gravel base. Geogrid soil reinforcement in lengths of about 22 feet (6.7 m) was laid behind the wall on every other course, with 2-inch-minus (50 mm) crushed rock used on top of the grid layers. "We had to bring in all the material to backfill on top of the grid for the whole distance," says DeVault.

Eckhart Construction Services Inc. performed the actual wall construction. "There was really a lot of competition for the block work," says Mark Eckhart, vice president. "Early on, it seemed like everyone and their brother on the manufacturing side was a VMI graduate, or had a relative who was. We weren't quite sure what the ultimate selection and block facing was going to be."

Eckhart says, "We were very concerned early on about establishing criteria for determining which units were acceptable and which units were to be culled. But we had very, very few culled units—so few it wasn't even worth reporting." The entire lot of retaining wall units was created in a single production run to ensure consistency in color, strength and texture.

Straight and True Corners

The wall features 45-degree recesses, or "bump-outs," for added visual interest. Special solid corner blocks enabled the workers to keep the corners straight even at heights to 34 feet (10.36 m), says Eckhart. "The manufacturer gave us the solution and showed us where to shear the units. We sheared the blocks on site and the corners turned out crisp and clean. We held a nice vertical line at each corner. Sometimes those things can drift left or right on you, but this was easily achieved."

The project included additional foundations on the drill fields for lighting towers and poles for 20-foot-tall (6 m) soccer netting on the obstacle course.

A Precendent is Set

A significant precedent has been established for SRWs at Virginia Military Institute. Traditionally, natural stone walls have been used throughout the post at VMI. Natural stone will likely be used on future projects—except where SRWs are the best solution. And that could be quite often. CMD

PROJECT DETAILS
Virginia Military Institute, Lexington, VA

GENERAL CONTRACTOR
Branch & Associates, Inc., Roanoke, VA

WALL SUBCONTRACTOR
Eckhart Construction Services, Inc., Ft. Mill, SC

ARCHITECT
Clark Nexen, Roanoke, VA

CIVIL ENGINEER
Draper Aden Associates, Blacksburg, VA

SRW PRODUCER
Chandler Concrete, Inc. Christiansburg, VA

SRW LICENSOR
VERSA-LOK Retaining Wall Systems

NSTITUTE DRILL FIELD

McCULLY MŌ'ILI'ILI FIRE STATION

The old McCully fire station was built in 1948 and was increasingly difficult to maintain and did not have the technologies and spaces normally available in newer fire stations. At the start of the construction the original building was demolished and the 19,555 sq ft (1,816 sq m) site was entirely redeveloped.

When Urban Works, Inc. was slected as the architect on the rebuild the list of requirements was quite long. The design had to provide:

- a functional and attractive fire station within a tight urban site, surrounded by streets on two sides
- a facility that allows for efficient movement of the fire trucks
- a community facility that is a good neighbor and promotes a sense of pride and security
- maximized day-lighting for reduced energy consumption
- views for the users of the building
- durable materials and finishes that will stand the test of time
- design creatively within a tight budget

cCULLY - MŌ'ILI'ILI FIRE STATION

CAFS

CMU Answers The Call

The project architect, Lorrin Matsunaga, AIA, was also interested in using a regionally manufactured building product that was readily available, durable, and appropriate to this building type. Due to the long list of requirements and a tight construction budget, CMU served as the principal load-bearing material for both the exterior and interior walls. Basic gray block units with banding of red units containing native Molokai aggregate are used on the exterior of the building. "Furthermore," says Matsunaga, "I found the masonry to be compatible with the surrounding apartment buildings."

Human-Friendly Design

The main apparatus room, where the fire trucks are housed, serves as a buffer between the traffic activity of the neighboring streets and the quieter sleeping and eating quarters. Rather than to create a single big box, Matsunaga chose to reduce the buildings mass by creating two smaller building components: a house for machines (the fire trucks) and a house for the people (the firefighters). This strategy, plus the ability of CMU to dampen the noise of the livlier areas, helped to create a restful live-work environment for the firefighters and the nearby residences and apartments. And most importantly, says Matsunaga, "the stacking of the living spaces resulted in

a smaller foodprint, accommodating an efficient turning radius for the fire trucks." The fire trucks enter from University Street and leave the station via Date Street without the firefighters having to reverse into the apparatus bay. The large openings on the northern and southwestern sides allow the public to view the parked fire trucks.

Environmentaly-Friendly Design

Several design elements were utilized to reduce the energy consumption of the station without reducing the comfort of the personell. The single-story apparatus bay and the two-story personel wing were designed with simple shed roofs with generous overhangs to provide protection from sun and rain. While a majority of rooms are normally air-conditioned, the personnel spaces receive exposure to the prevailing trade winds that come in a northeasterly direction. In addition, the opposing shed roofs (the apparatus room being higher than the personel side of the station) allow this space to have vented louvered openings at the high point to help evacuate warm air and augment the mechanical exhaust system.

Region-Friendly Design

The McCully Fire Stateion is located wihin the McCully-Mōili'ili neighborhood of urban Honolulu. The neighborhood is essentially residential, consisting of nondescript, post-war masonry and wood-framed homes and apartments—many with simple asphalt shingle hip-and-gable roofs. The design is quite aestically pleasing, but also blends into the densely packed neighborhood. Durable materials such as concrete slab-on-grade, structural masonry walls, concrete columns and beams were used to resist the lateral seismic load. Because the concrete beams and concrete masonry unit walls have the same coefficient of expansion, the transition (tie in) between building materials was simplified. CMD

PROJECT LOCATION
Honolulu, Hawaii
ARCHITECT
Urban Works, Inc
STRUCTURAL ENGINEER
SSFM International
CONTRACTOR
Allied Construction
MASONRY SUPPLIER
Tileco, Inc
MASONRY CONTRACTOR
Affiliated Construction, LLC

Photos: Augie Salbosa Photography

MASSIVE FIRE HIGHLIGHTS CONCERN OVER PROPOSED CHANGES TO CANADIAN BUILDING CODE

Recent fires in homes with mid-rise wood frame buildings have brought into focus the issue of fire safety in residential neighborhood. The Richmond, B.C. fire on Wednesday, May 4, 2011 is a case in point.

The blaze broke out at about 10:30 p.m., quickly burning down the two six-storey buildings that were still under construction, and imperilling the neighborhood. According to news stories, the massive fire at the 251-unit condominium and social housing project burned for more than five hours before being brought under control. No lives were lost, but the danger underscores the need to re-examine the recent decision in B.C. to allow mid-rise wood frame construction, instead of the long-required fire resistant masonry materials such as concrete block.

Recent proposed changes to the Ontario Building Code and to the National Building Code, that would allow wood frame buildings over 4-story in other regions of Canada, are being strongly opposed by the masonry industry as dangerous to human life. The Richmond, B.C. project was to be the first example of a 6-story all-wood structure, as allowed under the changes to the B.C. Building Code, which came into effect in 2009. The Masonry Institute in B.C. has issued a statement of concern over these changes to the Building Code.

"Human life and the safety of our neighborhood are at question here," says Bill McEwen, Executive Director of the Masonry Institute of B.C. "Engineered wood products, which are used extensively in these types of buildings, are fabricated with glue, and can burn faster than regular wood products. The firewalls in

the Richmond project were made of wood and drywall. Normal concrete block firewalls were not used, apparently due to concerns about the large amount of wood shrinkage expected in 6-story wood construction. Concrete block walls could have protected these buildings, both during construction and more importantly during occupancy."

Said McEwen on the scene of the fire, "If these buildings had been constructed with concrete block, we would not be here today."

MasonryWorx reports that the deputy fire marshal for Ontario, Doug Crawford, has expressed concern in the past about fighting fires from within a 6-story all-wood structure, as they incorporate engineered wood products that provide little fire resistance when exposed to high temperatures.

The 18m (59 ft) height limit in these 6-story wood frame buildings was set in B.C. on the basis of the maximum ladder height available from fire rescue services. The expectation is that these fires will have to be fought from outside the structure and rescue operations would also be conducted from outside the structure.

Paul Hargest, President of Canadian Concrete Masonry Producers Association, notes that wood composite elements, such as oriented strand board (OSB) give off fumes when they burn, increasing risk to firefighters on the scene and to occupants in the building, who may choke on the chemical fumes before they even realize there is a fire on the premises. Composite wood I-joists, now common in wood frame construction, are known to collapse under fire conditions far sooner than traditional dimension lumber joists.

MasonryWorx, an industry association dedicated to maintaining construction standards, and protecting public health and safety in construction and building, have issued a concern about the proposed changes to the Ontario Building Codes to allow 6-Story wood frame housing. In a letter to Ontario Members of Provincial Parliament, President of MasonryWorx, Dante Di Giovanni writes, "By the very nature of this change, it is unquestionable that the fundamental objectives of the Ontario Building Code (OBC) and the needed levels of structural and fire safety and performance will be compromised."

Di Giovanni also states, "While we would all like to examine ways of lowering the cost of construction, compromising the safety and quality of building materials is not in the best interests of occupants."

The position of MasonryWorx against wood frame mid-rise construction is as follows:

Adequacy of Fire Fighting Resources:

- The proposed OBC mid-rise changes will serve to increase the combustible building density in all regions of Ontario, not just the major centres.

- The fire services industry has expressed concern about the fire fighting capabilities in smaller municipalities, many with only volunteer fire services.

- The personnel and equipment necessary to fight such fires will, it is felt, quickly overwhelm the fire resources in these centres.

- There is no internal rescue in these buildings. Adequate ladders are only available in some centres. Equipment and personnel in

many rural centres are deficient in this regard.

- With no internal rescue possible, will fire drills be mandatory in such buildings?

Fires During Construction Phase:

- This is a major concern of the Fire Marshall's office and the Fire Fighters Association.

- Studies report that up to 70% of fires during construction are arson.

- Additional security and fire protection during construction was requested by the fire services sector in BC when these changes were adopted there, but the BC government rejected these requests.

- Ontario makes no mention of additional protection during the construction phase, simply suggesting that the sprinkler system be installed in parallel with construction of the building.

"It is essential to keep our communities safe," says Di Giovanni. "It is our hope that the public will demand high standards in building codes and a safety first policy in all our building practises. We urge Ontario residents to write to their local MPP and ask that our standards for safe building materials be maintained, not allowing mid-rise wood frame housing."

Hargest adds, "It is critical that communities demand safe housing. Durable, reliable building materials, such as block and concrete, are proven to be effectively fire resistant, and should be demanded in all our buildings as essential to protecting human life. With changes to the Building Code being proposed that would allow 6-story wood frame construction, all Canadian residents should contact their Member of Parliament and Provincial Members of Parliament and voice their concern." CMD

BEFORE
The structure in November 2010

AFTER
The structure from the same perspective May 4, 2011

Dante Di Giovanni, President, MasonryWorx (416-798-4996) MasonryWorx is an association of industry professionals working in brick, block and stone masonry. Its membership includes product manufacturers, suppliers and skilled professionals from across Ontario and it is committed to providing homebuyers, homeowners, architects, engineers, and builders with accurate information about the use and benefits of brick, block and stone products. For more information, please visit www.masonryworx.ca

Paul Hargest, President, Canadian Concrete Masonry Producers Association (519-624-8396)The Canadian Concrete Masonry Producers Association (CCMPA). The Canadian Concrete Masonry Producers Association operates as Region 6 of the National Concrete Masonry Association, and is the representative voice for the Canadian concrete block manufacturing industry. For more information about CCMPA, please visit www.ccmpa.ca.

NATIONAL CONCRETE MASONRY ASSOCIATION
Sustainable Concrete Products for Structures and Hardscapes

INTEGRATING CONCRETE MASONRY WALLS WITH METAL BUILDING SYSTEMS

TEK 5-5B
Details (2011)

INTRODUCTION

Metal buildings are used extensively for warehouses and other structures requiring large, open floor spaces. Part of their design flexibility comes from the ability to clad metal buildings with a variety of materials to provide different appearances or functions to the buildings. Concrete masonry walls are popular enclosure systems for metal buildings because of masonry's aesthetic appeal, impact resistance, strength, and fire resistance. The durability of concrete masonry resists incidental impacts from hand carts and forklifts, provides maximum protection in disasters such as earthquakes and hurricanes, as well as superior security, fire resistance, and noise control.

Concrete masonry walls used for metal buildings can include: exterior full-height walls, either with or without a parapet; exterior partial-height or wainscot walls; and interior loadbearing walls or nonloadbearing walls or partitions. Architectural concrete masonry units, such as colored, split faced, burnished, or scored units, can be used to provide an almost limitless array of textures and patterns to the walls. These units can be used for the entire facade or for banding courses to achieve specific patterns or highlight certain design aspects of the building.

A more detailed discussion of the system, along with structural design and construction considerations, is included in *Concrete Masonry Walls for Metal Building Systems* (ref. 1). The manual is intended to bridge the gap between the engineer who designs the metal building system and the engineer who designs the concrete masonry walls to unify their respective knowledge.

DETAILS

A typical metal building clad with masonry is shown in Figure 1. Figures 2 - 6 show some typical details used for exterior concrete masonry cladding on a metal building. These details may need to be modified to meet individual design conditions.

Because of the inherent material differences between steel and masonry, careful consideration must be given to accommodating differential movement between the two materials and their assemblies. In *Serviceability Design Considerations for Low-Rise Buildings* (ref. 2), a lateral drift limit of $H/100$ for a ten year recurrence wind loading based on main wind force resisting system loads is suggested for low rise buildings with exterior masonry walls reinforced vertically. See Table 12.12.1 of ASCE 7 (ref. 4) for the allowable story drift for seismic loading. Most reinforced masonry walls for metal buildings are designed to span vertically, supported by a steel spandrel at the top and by the foundation at the bottom.

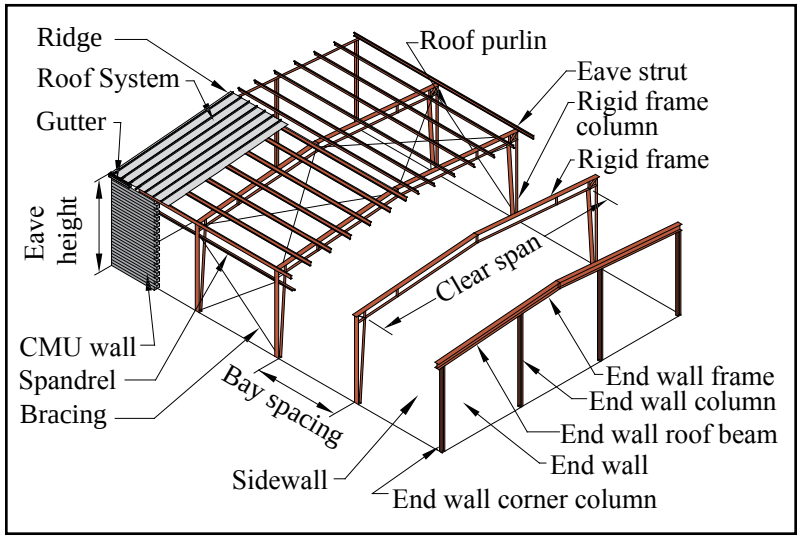

Figure 1—Schematic of Metal Building Clad with Concrete Masonry Walls

Keywords: anchorage, architectural details, cladding, connectors, construction details, deflection, drift, lateral loads, lateral support, metal building, shear walls, veneer, wall movement

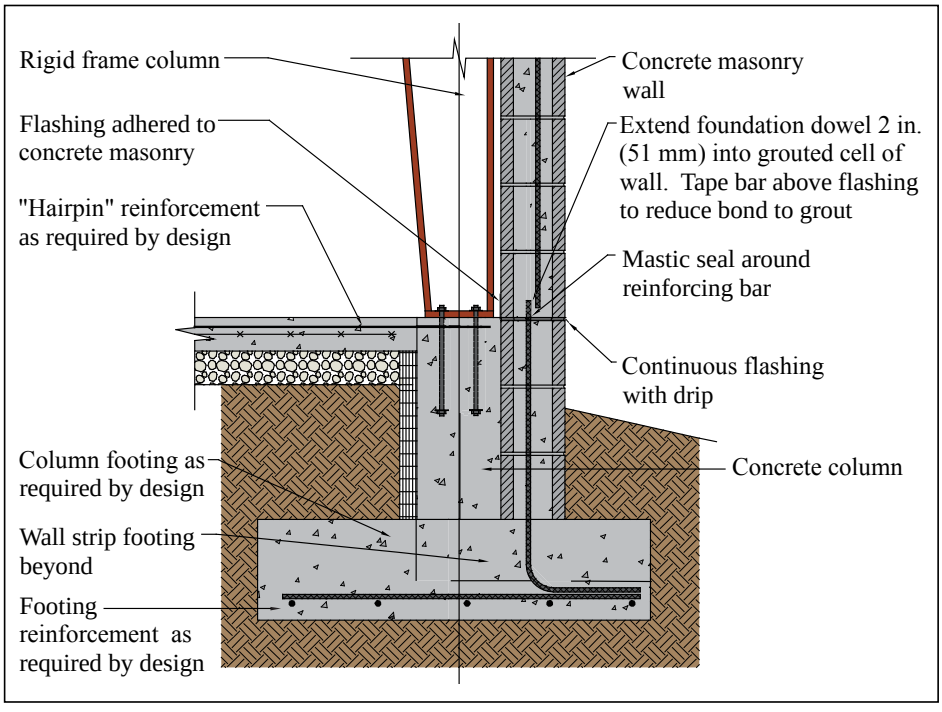

Figure 2—Vertically Spanning Reinforced Concrete Masonry Side Wall at Foundation for Other than Shear Wall Segment

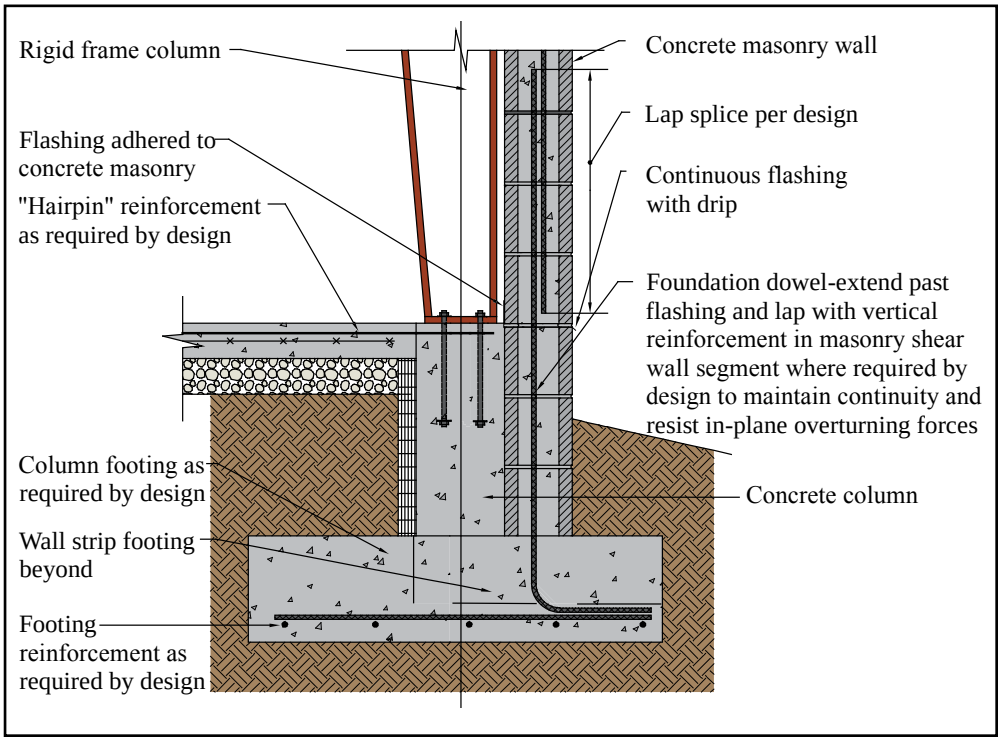

Figure 3—Vertically Spanning Reinforced Concrete Masonry Side Wall Shear Wall Segment Detail at Foundation

Wall Base

Because of stiffness and deformation incompatibilities between flexible steel and rigid masonry assemblies, and consequently, to control the location of cracking in the masonry walls that may result from relatively larger steel frame deflections at the top of the structure, a "hinge" can be incorporated at the base of the masonry assembly to allow out-of-plane rotation.

Two such hinge connections are shown in Figures 2 and 3. The construction shown in Figure 2 uses through-wall flashing to break the bond at the base of the wall providing a simply supported condition allowing shear transfer but no moment for out-of-plane loading. In many cases the shear force can be adequately transferred by friction through the flashed bed joint. However, it is recommended that a positive shear connection be provided by extending foundation dowels across the joint. It is recommended that the number of bars extended across the horizontal joint be minimized, and that the extension be limited to 2 in. (51 mm), to ensure that the joint will behave as assumed. Therefore, every vertical bar otherwise required for strength at critical sections does not necessarily need to be extended through the joint.

Masonry shear walls are very strong and stiff and are often used to resist lateral loads. However, masonry wall sections used as shear wall segments must have vertical reinforcement continuous into the foundation as shown in Figure 3. Flashing is also incorporated at the floor level to allow the wall some out-of-plane rotation due to building drift. Design aids are included in *Concrete Masonry Walls for Metal Building Systems* (ref. 1) for in-plane and out-of-plane reinforced masonry walls as well as for lintels and anchor bolts. Appendix C also presents design ex-

NATIONAL CONCRETE MASONRY ASSOCIATION
Sustainable Concrete Products for Structures and Hardscapes

EVALUATING THE COMPRESSIVE STRENGTH OF CONCRETE MASONRY

TEK 18-1B
Quality Assurance & Testing (2011)

INTRODUCTION

Structural performance of concrete masonry is largely dependent upon three key criteria:

- the engineering rationale incorporated into the design of the structure;
- the physical characteristics of the materials used in the construction of the structure (i.e., the masonry units, grout, mortar, and reinforcement); and
- the quality of the construction used in assembling these components.

The first step in the design of any engineered masonry structure is determining anticipated service loads. Once these loads are established, the required strength of the masonry can be determined. The designation f'_m indicates the specified compressive strength of masonry. It is used throughout the design and, in accordance with the appropriate code, to predict the strength and behavior of the masonry assembly and thus to size masonry elements. It should be stressed that the specified compressive strength of the masonry is related to but *not* equal to the tested compressive strength of the masonry.

To ensure that a safe and functional structure is being constructed that will meet or exceed the intended service life, measures must be taken to verify that the compressive strength of the assembled materials, including masonry units, mortar and grout if used, meet or exceed the specified compressive strength of the masonry.

Compliance with the specified compressive strength is verified by one of two methods: the unit strength method or the prism test method. These two methods are referenced in masonry design codes (refs. 1, 4), specifications (ref. 2), and standards (ref. 3) as rational procedures for verifying masonry compressive strength.

UNIT STRENGTH METHOD

The unit strength method is often considered the least expensive and most convenient of the two methods. However, the unit strength method also yields *more conservative* masonry strengths when compared to the prism test method especially at the higher range of masonry unit strengths.

Compliance with f'_m by the unit strength method is based on the net area compressive strength of the units and the type of mortar used. The compressive strength of the masonry assemblage is then established in accordance with Table 1. Table 1 is based on criteria from *Specification for Masonry Structures* (ref. 2) and the *International Building Code* (ref. 4).

Table 1—Compressive Strength of Masonry Based on the Compressive Strength of Concrete Masonry Units and Type of Mortar Used in Construction (ref. 1)

Net area compressive strength of concrete masonry units, psi (MPa)		Net area compressive strength of masonry[A], psi (MPa)
Type M or S mortar	Type N mortar	
----	1,900 (13.10)	1,350 (9.31)
1,900 (13.10)	2,150 (14.82)	1,500 (10.34)
2,800 (19.31)	3,050 (21.03)	2,000 (13.79)
3,750 (25.86)	4,050 (27.92	2,500 (17.24)
4,800 (33.10)	5,250 (36.2)	3,000 (20.69)

[A] For units less than 4 in. (102 mm) in height, 85% of the values listed.

Keywords: ASTM standards, compressive strength, prism testing, specified compressive strength of masonry (f'_m) testing, unit strength method

According to both of these documents, use of the unit strength method requires the following:

- Masonry units must be sampled and tested in accordance with ASTM C140, *Standard Test Method for Sampling and Testing Concrete Masonry Units and Related Units* (ref. 5) and meet the requirements of either ASTM C55, *Standard Specification for Concrete Building Brick* (ref. 6) or ASTM C90, *Standard Specification for Loadbearing Concrete Masonry Units* (ref. 7).
- Thickness of bed joints used in construction must not exceed 5/8 in. (15.9 mm).
- If grouted masonry is used in construction, the grout must meet either the proportion or the property specification of ASTM C476, *Standard Specification for Grout for Masonry* (ref. 8), and the 28-day compressive strength of the grout must equal or exceed f'_m but not be less than 2,000 psi (14 MPa). When property specifications are used, the compressive strength of the grout is determined in accordance with ASTM C1019, *Standard Test Method for Sampling and Testing Grout* (ref. 9).
- Mortar must comply with requirements of ASTM C270, *Standard Specification for Mortar for Unit Masonry* (ref. 10).

Since all concrete masonry units complying with ASTM C90 (ref. 7) have compressive strengths exceeding 1,900 psi (13.1 MPa), by the unit strength method any C90 unit used with Type M or S mortar can be used for projects that have f'_m values up to 1,500 psi (10.3 MPa). If used with Type N mortar, any C90 unit can be used for projects having f'_m values up to 1,350 psi (9.3 MPa). Conversely, if the concrete masonry units have compressive strengths of 2,800 psi (19.3 MPa), then the maximum f'_m used in design would be 2,000 psi (13.8 MPa) if Type M or S mortar were used. Similarly, if 3,050 psi (21.0 MPa) concrete masonry were used in conjunction with Type N mortar, the maximum f'_m that could be used in design would also be 2,000 psi (13.8 MPa). Note that per footnote A of Table 1, compressive strength of masonry values must be multiplied by 85% when the unit strength is established on units less than 4 in. (102 mm) in height.

When higher strength masonry materials are specified, it usually is more cost effective to utilize the prism test method to demonstrate compliance with f'_m due to the level of conservatism inherent in the unit strength method; i.e., the costs of testing are well offset by the construction savings resulting from a more economical design that takes advantage of using a higher compressive strength for the same specified materials.

PRISM TEST METHOD

ASTM C1314, *Standard Test Method for Compressive Strength of Masonry Prisms* (ref. 3), contains provisions for determining the compressive strength of a masonry prism: an assemblage made of representative units, mortar and grout (for grouted masonry construction). Although constructed using materials used in the project, the prism is not intended to be a reduced-scale version of the wall, but rather a quality assurance instrument to demonstrate how the masonry components work together. For this reason, prisms are typically constructed in stack bond with a full mortar joint, regardless of the wall construction. The tested

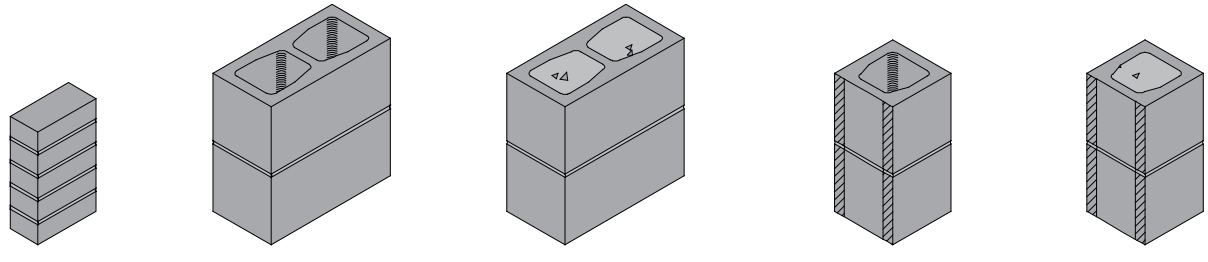

Concrete brick prism | Ungrouted prism[A] | Grouted prism[A] | Ungrouted[A] | Grouted[A]

Prisms reduced by saw cutting[B]

[A] Where top and bottom cross sections vary due to taper of the cells, or where the architectural surface of either side of the unit varies, the orientation must be the same as used in the corresponding construction.

[B] Where masonry units are saw-cut, the face shells or projections shall be cut flush with the face of the webs or symmetrical with the projection length no greater than the projection thickness as shown in Figure 2.

Figure 1—Types of Prisms

compressive strength of the prism is corrected to account for different permissible height to thickness ratios of the prisms. This corrected strength must equal or exceed f'_m. Understandably, prism testing should be undertaken before construction begins to verify that the compressive strength of the assembled materials is not less than the specified compressive strength used in the design.

Prisms should be 28 days old to document compliance with f'_m, When prisms are tested as part of an inspection program periodically during the course of construction, an earlier age, such as 3 or 7 days, is often preferred. To confidently interpret the results of these earlier age prism tests, the relationship between prism age and strength development should be determined using the materials, construction methods and testing procedures to be used throughout the job. Only when this strength/time curve is generated can early age test results be extrapolated to predict the 28-day strength.

Prism Construction

Masonry prisms are constructed using units representative of those being used in the construction. One set of prisms (containing three individual prisms) is constructed for each combination of materials and each testing age for which the compressive strength is to be determined. For multi-wythe masonry construction, with different units or mortar in each wythe, separate prisms should be built representative of each wythe, and tested separately. Prisms should be constructed on a flat and level location where they can remain undisturbed until they are transported for testing, at least 48 hours.

All units used to construct the prisms must be of the same configuration and oriented in the same way so that webs and face shells are aligned one on top of the other. Units are laid in stack bond on a full mortar bed using mortar representative of that used in the corresponding construction. Mortar joints are cut flush regardless of the type of mortar joint tooling used in the construction. Prisms composed of units that contain closed cells must have at least one complete cell with one full-width cross web on either end. Various prism configurations are shown in Figure 1.

Since masonry prisms can be heavy, especially grouted prisms, it often proves effective to construct prisms using half-length units. The criteria for constructing prisms of reduced-sized units are (also see Figure 2):

- that hollow units contain fully closed cells,
- that the cross section is as symmetrical as possible, and
- that the length is not less than 4 in. (102 mm).

As a result, handling, transporting, capping, and testing the reduced sized prisms is easier, resulting in less potential for damage to the prisms. Using reduced-length prisms also reduces the required plate thicknesses for compression machines and typically result in higher and more accurate assessments of masonry strengths.

Immediately following construction of the prisms, each prism is sealed in a moisture-tight bag, as shown in Figure 3. The prism test method requires prisms to be cured in sealed plastic bags to ensure uniform hydration of the mortar and the grout if used. Under actual field conditions, it may require longer periods for hydration and the corresponding strengths to be achieved. Curing prisms in sealed plastic bags results in measured strengths which are representative of those exhibited by the masonry throughout the life of the structure. Bag curing also provides a uniform and repeatable testing procedure.

Where the corresponding construction is to be grouted solid, each prism is grouted solid using grout representa-

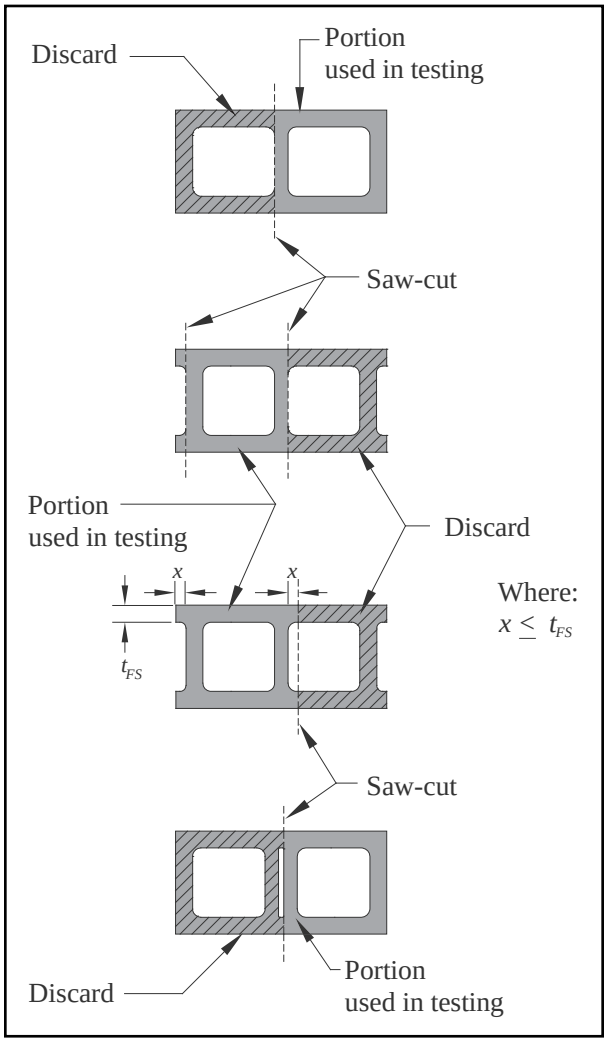

Figure 2—Saw-Cut Locations for Reduced-Size Prisms

tive of that being used in the corresponding construction. When prisms are used for field quality control or assurance, prisms must be constructed at the same time as the corresponding construction and grouted when the construction is being grouted. When prisms are used for other purposes, such as preconstruction or for research, prism grouting must occur between 4 hours and 48 hours following the construction of the prisms.

After grouting, the grout in each prism is consolidated and reconsolidated using procedures representative of those used in the corresponding construction. After each consolidation, the grout in the prism will likely settle due to water absorption from the grout into the masonry units. Therefore, after each consolidation, additional grout should be added as necessary and be screeded level with the top of the prism to facilitate capping. Reinforcement is not included in prisms. Immediately following prism grouting, the moisture-tight bag is resealed around each prism.

If the corresponding construction will be partially grouted, two sets of prisms are constructed—one set grouted and one set ungrouted.

Figure 3—Constructing a Half-Length Prism in a Plastic Bag

Transporting Prisms

Since mishandling prisms during transportation from the job site to the testing facility can have significant detrimental effects on the tested compressive strength of prisms, extreme care should be taken to protect against damage during transport. Prior to transporting, the prisms should be strapped or clamped as shown in Figure 4 to prevent damage. Tightly clamping or strapping plywood to the top and bottom of a prism prevents the mortar joint from being subjected to tensile stresses during handling. The prisms should also be secured during transport to prevent jarring, bouncing or tipping.

Curing Prisms

As previously stated, each prism is constructed in a moisture-tight bag (Figure 3) large enough to enclose and seal the completed prism. The bags should have adequate thickness to prevent tearing; a thickness of 2 mils (0.0051 mm) or greater has been found to work well. After the initial 48 hours of job site curing in the moisture-tight bag, each prism is carefully moved to a location where the temperature is maintained at 75 ± 15° F (24 ± 8° C) for full curing prior to testing.

Prism Net Cross-Sectional Area

To provide accurate an accurate strength calculation, the laboratory needs to determine the net area of the prisms. Ungrouted masonry prisms should be delivered to the testing agency with three additional units, identical to those used to construct the prism. If reduced-length prisms are used, additional reduced-length units should accompany the prisms to the laboratory for this purpose.

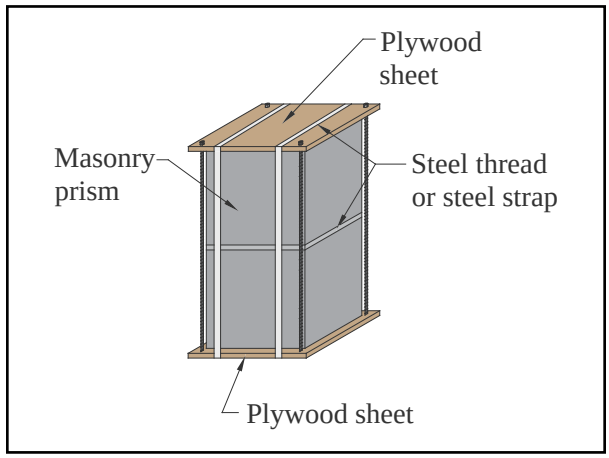

Figure 4—Transporting Prisms

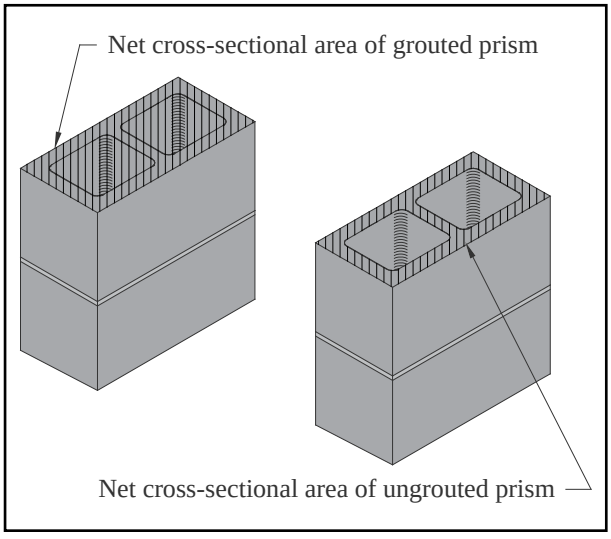

Figure 5—Net Cross-Sectional Areas of Grouted and Ungrouted Prisms

The net cross-sectional area used to calculate compressive strength of a prism depends on whether the prisms are grouted or ungrouted. For ungrouted full-size prisms, the cross-sectional area is the net cross-sectional area of the masonry units determined in accordance with ASTM C140 on concrete masonry units identical to those used to construct the prisms. When reduced sized units are used to construct ungrouted prisms, the net cross-sectional area is based on the reduced sized units.

When testing fully grouted prisms, net cross-sectional area is determined by multiplying the actual length and width of the prism per ASTM C1314. These areas are illustrated in Figure 5.

Testing Prisms

Two days prior to the 28 day time interval or the designated testing time, each prism is removed from the moisture tight bag. Prism age is determined from the time of laying units for ungrouted prisms, and from the time of grouting for grouted prisms.

To provide a smooth bearing surface, prisms are capped with either a sulfur or high-strength gypsum compound in accordance with ASTM C1552, *Standard Practice for Capping Concrete Masonry Units, Related Units and Masonry Prisms for Compression Testing* (ref. 12). No other capping materials are permitted, nor are unbonded caps.

Capping provides level and uniform bearing surfaces for testing, thereby eliminating point loads due to surface irregularities. The result is more uniform and reliable compressive strength values. Patching of caps is not permitted because it is difficult to maintain a planar surface within the tolerances of ASTM C1552.

Capping materials must have a compressive strength of at least 3,500 psi (24.13 MPa) at an age of 2 hours when cubes of the material are tested in accordance with ASTM C617, *Standard Practice for Capping Cylindrical Concrete Specimens* (ref. 13).

The average thickness of the cap must not exceed $^1/_8$ in. (3.2 mm). Caps are to be aged for at least 2 hours before testing the specimens, regardless of the type of capping material. Capping plates of adequate stiffness and smoothness are critical to achieving accurate results. Machined steel plates of 1 in. (25.4 mm) minimum thickness are required as a base. Glass plates not less than $^1/_2$ in. (12.7 mm) in thickness may be used as a wearing surface to protect the plates. The capping wear plate must be plane within 0.003 in. in 16 in. (0.075 mm in 400 mm) and free of gouges, grooves and indentations greater than 0.010 in. (0.25 mm) deep or greater than 0.05 in.^{2} (32 mm^2).

One of the most common oversights in testing masonry prisms is compliance with the established requirements for the testing machine itself. The testing machine is required to have a spherically seated head with a minimum 6 in. (150 mm) diameter and capable of rotating in any direction. The spherically seated head is then attached to a single thickness steel bearing plate having a width and length at least $^1/_4$ in. (6.4 mm) greater than the length and width of the prism being tested. The required thickness of the steel bearing plate depends on the diameter of the spherically seated head and the width and length of the prism being tested. The thickness of the steel bearing plate must equal or exceed the maximum distance from the outside of the spherically seated head to the outmost corner of the prism—designated *d* in Figure 6. Failure to provide the required minimum bearing plate thickness decreases the measured compressive strength of the prism due to the bearing plate bending during testing. It is also required that the bearing faces of the plates have a Rockwell hardness of at least HRC 60 (BHN 620).

The last step prior to testing a prism in compression is determining the prisms center of mass. The center of mass of a prism can be thought of as the point on the cross-section of a prism where it could physically balance on a point. The prism is then centered within the test machine such that the center of mass coincides with the center of thrust (which coincides with the center of the spherically seated head).

Failure to align the center of mass with the center of thrust results in a nonuniform application of load and therefore lower measured compressive strengths. For prisms having symmetric cross-sections, the mass centroid coincides with the geometric centroid—or the center of the

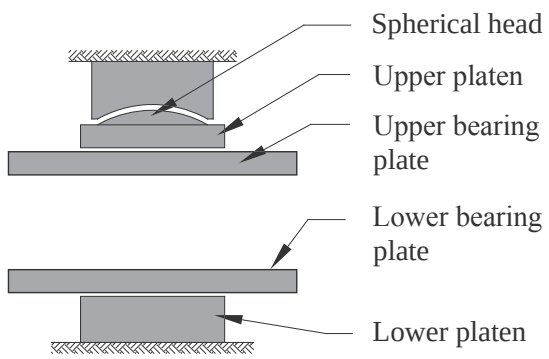

Example of determining the required bearing plate thickness:

Diameter of spherically seated head = 8 in. (203 mm)
Width of prism = 7.64 in. (194 mm)
Height of prism = 15.66 in. (398 mm)
Length of prism = 15.63 in. (397 mm)

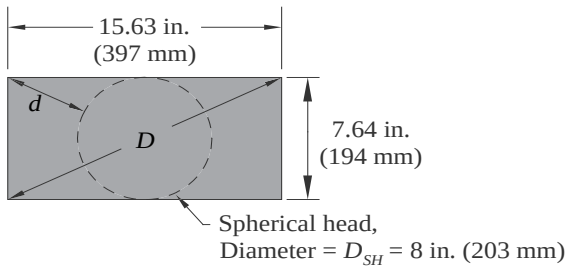

$$D = \sqrt{(7.64)^2 + (15.63)^2} = 17.40 \text{ in. } (442 \text{ mm})$$

$$d = \frac{D - D_{SH}}{2} = \frac{17.40 - 8}{2} = 4.70 \text{ in. } (119 \text{ mm})$$

Therefore, the bearing plate thickness, T, must equal or exceed 4.70 in. (119 mm).

If the prism is constructed of half-length units, however, T is significantly reduced from 4.7 in. (119 mm) to 1.41 in. (35.7 mm):
Width of prism = 7.64 in. (194 mm)
Length of prism = 7.65 in. (194 mm)

$$D = \sqrt{(7.65)^2 + (7.64)^2} = 10.81 \text{ in. } (275 \text{ mm})$$

$$d = \frac{D - D_{SH}}{2} = \frac{10.81 - 8}{2} = 1.41 \text{ in. } (35.7 \text{ mm})$$

Figure 6—Determination of Bearing Plate Thickness

prism as measured with a ruler. For prisms that are nonsymmetrical about an axis, the location of that axis can be determined by balancing the masonry unit on a knife edge or a metal rod placed parallel to that axis. If a metal rod is used, the rod must be straight, cylindrical (able to roll freely on a flat surface), have a diameter between $^1/_4$ in. and $^3/_4$ in. (6.4 and 19.1 mm), and it must be longer than the specimen. Once determined, the centroidal axis can be marked on the end of the prism.

To test the prism, it is placed in the compression machine with both centroidal axes of the specimen aligned with the machine's center of thrust. The maximum load and type of fracture is recorded. Prism strength is calculated from the maximum load divided by the prism net area. This prism strength is then corrected as described below.

Corrections for Prism Aspect Ratio

Since the ratio of height, h_p, to least lateral dimension, t_p,—designated the aspect ratio or h_p/t_p—of the prism can significantly affect the load carrying capacity of the masonry prism, ASTM C1314 contains correction factors for prisms having different aspect ratios, as outlined in Table 2.

To use the values in Table 2, simply multiply the measured compressive strength of the prism by the correction factor corresponding to the aspect ratio for that prism. Correction factors shown in Table 3 can be linearly interpolated between values, but cannot be extrapolated for aspect ratios less than 1.3 or greater than 5.0.

PRISMS FROM EXISTING CONSTRUCTION

The majority of quality assurance testing of concrete masonry materials is conducted on samples representative of those used in the construction. In some cases, however, it may be necessary or desirable to evaluate the properties of existing masonry construction using the actual construction materials instead of representative samples. Examples where the in-place (in-situ) masonry properties might need

Table 2—Prism Aspect Ratio Correction Factors (ref. 3)

h_p/t_p:	Correction factor:
1.3	0.75
1.5	0.86
2.0	1.00
2.5	1.04
3.0	1.07
4.0	1.15
5.0	1.22

to be considered include old or damaged construction, or during the construction process, when: a testing variable or construction practice fails to meet specifications; a test specimen is damaged prior to testing; test records are lost; or representative samples are not otherwise available.

The procedures covered in ASTM C1532, *Standard Guide for Selection, Removal, and Shipment of Manufactured Masonry Units and Specimens from Existing Construction*, (ref. 14), are useful when physical examination of an assembly's compressive strength, stiffness, flexural strength or bond strength is needed on a representative sample of the actual construction. These specimens are a portion of the existing masonry, and may include units, mortar, grout, reinforcing steel, collar joint and masonry accessories. The specimens can be taken from single or multiwythe construction. The procedures outlined in C1532 focus on documenting the condition of the masonry and protecting the specimens from damage during removal and transportation to the testing laboratory.

C1532 is very similar to ASTM C1420, *Standard Guide for Selection, Removal, and Shipment of Manufactured Masonry Units Placed in Usage* (ref. 15).

Standard Practice for Preparation of Field Removed Manufactured Masonry Units and Masonry Specimens for Compressive Strength Testing, ASTM C1587 (ref. 16), provides procedures for preparing field-removed specimens for compressive strength testing, and covers procedures such as removing hardened mortar and cleaning.

Compressive strength test results of field-removed masonry units and assemblies are expected to vary from, and will likely be less than, compressive strength test results of new masonry units and newly assembled prisms. Therefore, drawing relationships between the results of tests conducted on field-removed specimens to those of masonry units prior to use or of constructed prisms is difficult.

Prior to removal of specimens from existing construction, a repair plan should be developed. This plan should include replacement of units removed and repair of any disturbed or cut reinforcement, including those unintentionally damaged during the removal process.

Selecting Specimens

Specimens should be representative of the masonry construction as a whole, considering variations within the construction such as: parapets, corbels, areas where different masonry units are combined for architectural effects, as well as variations in the condition or exposure of the masonry. C1532 includes guidance on random sampling, location-specific sampling, and on condition-specific sampling. When testing to help quantify the effects of various exposures or conditions, the sampling should represent each exposure condition.

Thorough documentation of the specimen's condition prior to removal is necessary to assess whether the specimen was subsequently damaged during removal and transport, and for comparative purposes with the other specimens.

Removing Specimens

Carefully remove each specimen at its perimeter, ensuring the specimen is the appropriate size for the intended testing. Note that hydraulic or electric impact equipment should not be used, due to the potential for damaging the specimens. Saw-cutting or hand chiseling is preferred.

The following procedure is recommended. Make the first cut along the bottom of the specimen (on both sides of the wall if necessary) and insert shims. Make the two vertical cuts at the sides of the specimen, then make the top cut. Provide any necessary shoring, bracing and weather protection for the remaining construction. Similar to the pre-removal documentation, assess and document the specimen's condition to determine if the specimen was damaged during removal.

Transporting Specimens

The specimens should be confined as described in *Transporting Prisms*, page 4. In addition, each specimen should be protected on all sides with material such as 1 in. (25 mm) thick packaging foam or bubble wrap, placed in sturdy crates, and the crates completely filled with packing material to ensure the specimens cannot move within the crate during transport.

Testing Specimens

It is not permitted to test grouted or partially grouted specimens that contain vertical reinforcement. Specimens cut from existing construction containing horizontal reinforcement can be tested, but the presence and location of reinforcement should be noted and reported.

Prisms must: include at least one mortar bed joint; have an aspect ratio (h_p/t_p) between 1.3 and 5; have a height of at least two units (each of which is at least one-half the height of a typical unit); have a length one-half the unit length and two unit lengths; not include vertical reinforcement. In addition, when prisms contain units of different sizes and/or shapes, the unit height and length are considered to be that of the largest unit height or largest unit length within the prism.

The specimens should be prepared for capping by smoothing and removing loose or otherwise unsound material from the bearing surfaces, to produce a plumb and level surface.

Note that grouted or partially grouted specimens

cannot contain vertical reinforcement. The specimens are photographed to document specimen condition prior to capping. Capping and testing procedures are identical to those for constructed prisms.

Field-removed prisms may have non-uniform dimensions that should be considered when determining net cross-sectional area for calculating compressive strength. Professional judgement should be used to determine the minimum bearing area of a non-uniform prism. One effective method for face-shell bedded specimens is to multiply the length of the specimen at the bed joint by the sum of the face shell thicknesses to determine minimum bearing area.

REFERENCES

1. *Building Code Requirements for Masonry Structures*, ACI 530-11/ASCE 5-11/TMS 402-11. Reported by the Masonry Standards Joint Committee, 2011.
2. *Specifications for Masonry Structures*, ACI 530.1-11/ASCE 6-11/TMS 602-11. Reported by the Masonry Standards Joint Committee, 2011.
3. *Standard Test Method for Compressive Strength of Masonry Prisms*, ASTM C1314-10. ASTM International, Inc., 2010.
4. *International Building Code,* International Code Council, 2012.
5. *Standard Test Methods of Sampling and Testing Concrete Masonry Units and Related Units,* ASTM C140-11. ASTM International, Inc., 2011.
6. *Standard Specification for Concrete Building Brick*, ASTM C55-09. ASTM International, Inc., 2009.
7. *Standard Specification for Loadbearing Concrete Masonry Units*, ASTM C90-11. ASTM International, Inc., 2011.
8. *Standard Specification for Grout for Masonry*,ASTM C476-10. ASTM International, Inc., 2010.
9. *Standard Test Method for Sampling and Testing Grout*, ASTM C1019-11. ASTM International, Inc., 2011.
10. *Standard Specification for Mortar for Unit Masonry*, ASTM C270-10. ASTM International, Inc., 2010.
11. *Standard Specification for Mortar Cement*, ASTM C1329-05. ASTM International, Inc., 2005.
12. *Standard Practice for Capping Concrete Masonry Units, Related Units and Masonry Prisms for Compression Testing,* ASTM C1552-09a. ASTM International, Inc., 2009.
13. *Standard Practice for Capping Cylindrical Concrete Specimens,* ASTM C617-10. ASTM International, Inc., 2010.
14. *Standard Guide for Seletion, Removal, and Shipment of Manufactured Masonry Units and Specimens from Existing Construction,* ASTM C1532-06. ASTM International, Inc., 2006.
15. *Standard Guide for Selection, Removal, and Shipment of Manufactured Masonry Units Placed in Usage,* ASTM C1420-03. ASTM International, Inc., 2003.
16. *Standard Practice for Preparation of Field Removed Manufactured Masonry Units and Masonry Specimens for Compressive Strength Testing,* ASTM C1587-09. ASTM International, Inc., 2009.

NCMA and the companies disseminating this technical information disclaim any and all responsibility and liability for the accuracy and the application of the information contained in this publication.

NATIONAL CONCRETE MASONRY ASSOCIATION
Sustainable Concrete Products for Structures and Hardscapes

NATIONAL CONCRETE MASONRY ASSOCIATION
13750 Sunrise Valley Drive, Herndon, Virginia 20171
www.ncma.org

To order a complete TEK Manual or TEK Index, contact NCMA Publications (703) 713-1900

amples using NCMA's popular, easy to use *Structural Masonry Design System Software* (ref. 3). As shown in Figure 4, these walls normally span vertically and are laterally supported by a spandrel at the top of the masonry portion of the wall.

When the masonry is designed with a base hinge, it is important to properly detail the building corners to accommodate the movements. A vertical isolation joint should be placed near the building corner and proper consideration should be given to the masonry and steel connections at corner columns. Flexible anchors and/or slotted connections should be used.

Wainscot Walls

Although full height masonry walls provide the most benefit particularly when the masonry is used for shear walls, partial-height walls, or wainscots, are sometimes used. These walls are commonly 4 to 10 ft (1.2 to 3.0 m) high with metal panel walls extending from the top of the masonry to the roof. The masonry provides strength and impact resistance for the portion of the wall most susceptible to damage.

Column Detail

Figure 5 shows the connection of a rigid frame column to concrete masonry sidewalls with a coincident vertical control joint. The details show vertically adjustable column anchors connecting the wall to the column. For walls designed to span vertically, it is good practice to provide a nominal number of anchors connecting the wall to the column to add stiffness and strength to the edge of the wall. If rigid enough, these anchors can assist in laterally bracing the outside column flange. For larger lateral loads, more substantial connections may be required. Anchorage to end wall columns is very similar.

Spandrel Detail

A typical spandrel detail is shown in Figure 6. Spandrels should be placed as high as possible to reduce the masonry span above the spandrel, especially on walls with parapets. Depending on the rigid frame configuration used, rigid frame connection plates and diagonal stiffeners may restrict the spandrel location. The spandrel is designed by the metal building manufacturer. If the inner flange of the spandrel needs to be braced, the metal building manufacturer will show on the drawings where the braces are required along with the in-

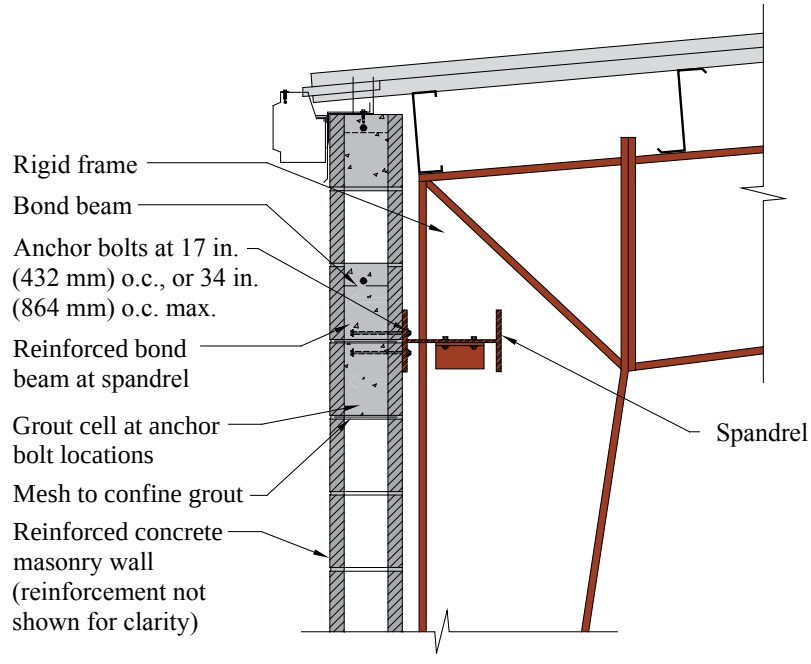

Note: A standardized punching of $^{9}/_{16}$ in. (14 mm) diameter holes at 17 in. (432 mm) centers for ½ in. (13 mm) masonry anchors is recommended The masonry engineer may choose to place the anchors farther apart than 17 in. (432 mm) o.c.; however, anchors should not be spaced more than 34 in. (864 mm) as this could affect lateral stability of the steel member being connected to prevent torsional buckling (ref. 1).

Figure 4—Single Wythe Wall Without Parapet at Low Side Wall or Eave (see also Figure 6)

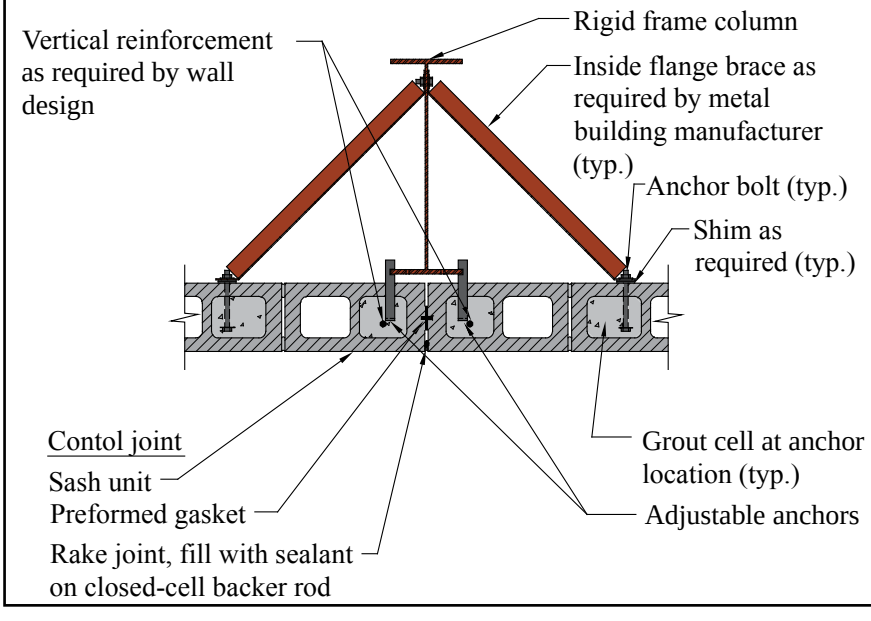

Figure 5—Adjustable Anchor Connection to Rigid Frame Column and Control Joint Detail

formation needed for the masonry engineer to design them and their anchorage to the wall.

Shim plates should be used at spandrel/masonry connections to allow for camber in the spandrel and other construction tolerances (see Figure 6). The steel spandrel should never be pulled to the masonry wall by tightening the anchor bolts.

CONSTRUCTION SEQUENCE

Typically, construction of metal buildings with concrete masonry walls proceeds as follows: concrete footing and column placement; concrete masonry foundation wall construction to grade; concrete slab placement; steel erection; and concrete masonry wall construction. Note, however, that this sequence may need to be modified to meet the needs of a particular project. For example, this construction sequence changes when loadbearing end walls are used. In this case, the steel supported by the masonry is erected after the masonry wall is in place.

Coordination between the various trades is essential for efficient construction. Preconstruction conferences are an excellent way for contractors and subcontractors to coordinate construction scheduling and to avoid conflicts and delays.

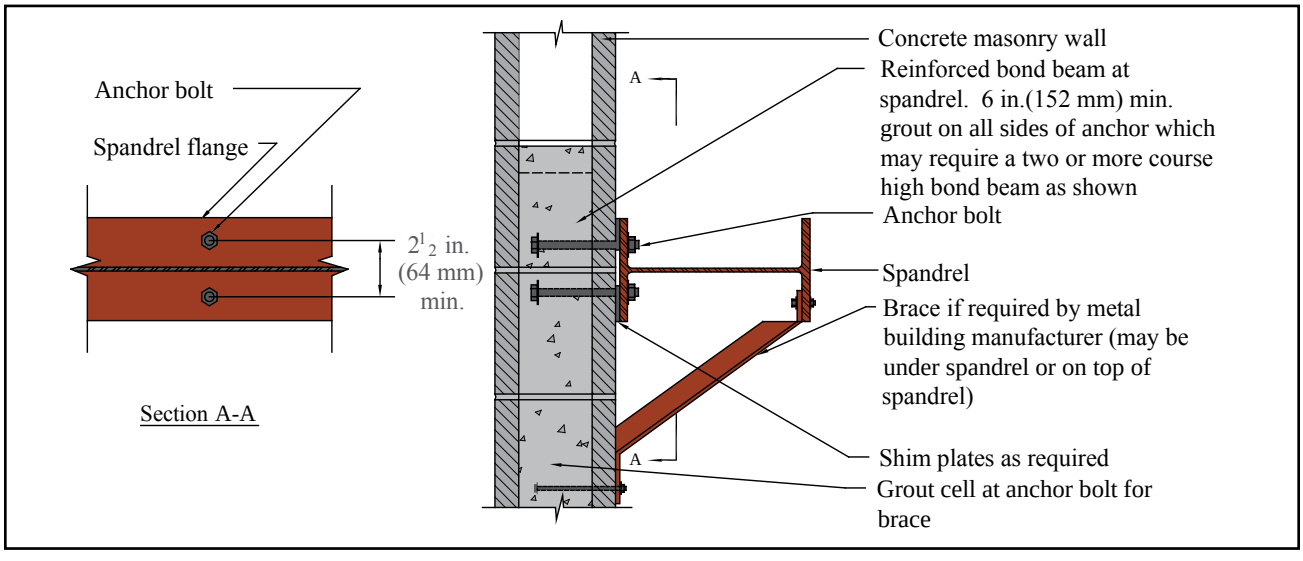

Figure 6—Structural Spandrel for Lateral Load Detail

REFERENCES

1. *Concrete Masonry Walls for Metal Building Systems*, TR 149A. National Concrete Masonry Association, Metal Building Manufacturers Association, International Code Council, 2011.
2. *Serviceability Design Considerations for Steel Buildings,* AISC Steel Design Guide #3. American Institute of Steel Construction, 2003.
3. *Structural Masonry Design System Software*. National Concrete Masonry Association, Western States Clay Products Association, The Brick Industry Association, and the International Code Council, 2010.
4. *Minimum Design Loads for Buildings and Other Structures*, ASCE 7-05. American Society for Civil Engineers, 2005.

NCMA and the companies disseminating this technical information disclaim any and all responsibility and liability for the accuracy and the application of the information contained in this publication.

NATIONAL CONCRETE MASONRY ASSOCIATION
Sustainable Concrete Products for Structures and Hardscapes

NATIONAL CONCRETE MASONRY ASSOCIATION
13750 Sunrise Valley Drive, Herndon, Virginia 20171
www.ncma.org

To order a complete TEK Manual or TEK Index, contact NCMA Publications (703) 713-1900

NATIONAL CONCRETE MASONRY ASSOCIATION

Sustainable Concrete Products for Structures and Hardscapes

ICPI INTERLOCKING CONCRETE PAVEMENT INSTITUTE®

The 10th Annual NCMA/ICPI Design Awards of Excellence

Call for Entries

Call for Entries!
Commercial, Residential, Hardscape, and Sustainability.

STEPS

Step 1 – Submit your one-page entry form and the $200 entry fee. Deadline June 15, 2011.

Step 2 – Begin compiling photographs, including a site plan and floor plan, and start writing the descriptive data.

Step 3 – NCMA will send you a binder on June 20, 2011. This binder will have additional forms in it. Fill these forms out and populate the binder with photographs, a site plan and floor plan. (see page 3 for more info)

Step 4 – Mail in your completed binder to NCMA, deadline (postmarked by) August 31, 2011.

Step 5 – Judging occurs the week of September 12, 2011.

Entries for the 2011 Design Awards of Excellence presented by the National Concrete Masonry Association must be postmarked no later than June 15, 2011. That means it's now time to plan to enter the only North American awards program that showcases design excellence and the architect's role using concrete masonry for commercial, residential, hardscape, and sustainability applications. Winning entries serve as testimony to the creativity and ingenuity of architects, designers and landscape architects focusing on the diversity of design excellence with concrete masonry. Entries are judged for both an Award of Excellence and an Award of Honor in one of four categories: commercial buildings, residential properties, hardscape (SRW, concrete pavers, ACBs) or sustainability.

What's in it for the winners?

Winners are awarded a monetary prize and honored during an awards ceremony at the 2012 NCMA Annual Membership Meeting and industry trade show to be held in Orlando, Florida, March 2012. Also, all winning projects will be displayed in an awards gallery during the convention and trade show.

Eligibility

Any architect, designer, engineer, or landscape architect can submit entries, regardless of project size, budget, style or type. Both established and new practitioners, from either small or large firms are encouraged to enter and both new projects and renovation/restoration projects are eligible. Concrete masonry units—architectural block, unit concrete pavers, segmental retaining walls or articulated concrete block revetment. Statements can be written onto the sheet or retyped onto a clean sheet of paper.

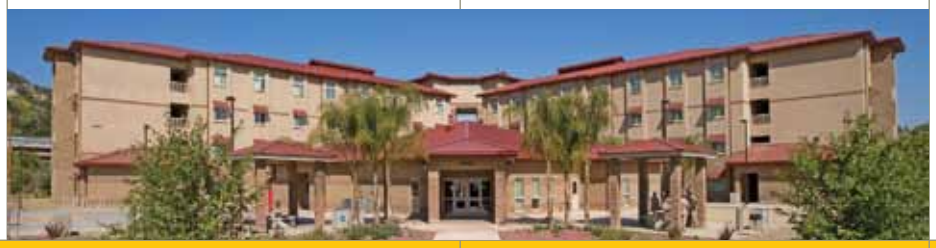

Submitting Project Binders

After you submit your entry form you will receive an 8.5 x 11 inch [216 x 279 mm] binder with a few forms to fill out. These forms will include a project information sheet, a descriptive data sheet, a concealed identification form, and a release form. All material for your project submission must be contained within the binder supplied to you. A separate binder will be provided for each project submitted. Pages may not be added to the binder, but both sides of each page may be used. Submitted binders must be returned to NCMA and postmarked no later than August 31, 2011.

Submissions of winning entries become the property of NCMA. If requested, every effort will be made to protect and return the submissions in good condition, but NCMA will not be held responsible for the loss or damage of any submission material.

Project Information Sheet

Each entrant will be required to select one item as the focus of their project. The list to choose from is below:

- Design Resolution
- Environmental Advancement
- Preservation/Restoration
- Societal Advancement
- Technical Advancement
- Sustainable Advancement
- Other

For more information on these categories see the "Criteria" section.

Descriptive Data Sheet

On the descriptive data sheet you will be required to fully explain the design goals, design concepts, design solution, and site characteristics. The emphasis of each statement should focus on the use of architectural block, unit concrete pavers, segmental

Concealed Identification Form

The concealed identification form (sent back in a sealed envelope) will not be shared with the judges and will be used for internal tracking of each project. The form will request contact information for the architect/firm, associate architect/firm, landscape architect, owner/developer, engineers, masonry contractor/installer, block producer/supplier, and general contractor. Because every project is unique, not every project will have each of these individuals/companies.

Release Form

Two release forms will be included in the binder that is supplied. These release forms require the entrant to clear the copyrights to photos, slides, and plans for incorporation into NCMA and/or ICPI publications including and beyond the design awards program. Entrants are responsible for any royalties or copyright photography fees.

Entry forms must be postmarked no later than June 15, 2011!

CALL 703.713.1900 WITH QUESTIONS.

taining walls or articulated concrete block revetment—must be a primary construction material in order for projects to be eligible.

Projects must have been designed by a licensed design professional or engineer at the time of completion. Designers may submit projects built anywhere in North America and completed within the last 5 years. Entry forms must be postmarked no later than June 15, 2011. All entries will be considered for publication in the national concrete masonry association's monthly architectural magazines, *Concrete Masonry Designs* and other publications.

Entrants must obtain approval to submit from the owner of the project(s). It is the responsibility of the designer entering a project to inform the owners of potential site visits and the potential for media recognition.

Judging Process

An independent panel of distinguished architects and landscape architect professionals will review all entries.

Projects that credit any of the 2011 NCMA Design Awards of Excellence jury members as an architect, associate architect, landscape architect, consultant or client are ineligible. Any communication or attempt to contact a juror is inappropriate and could cause the entry to be disqualified.

Criteria

Each entry in the NCMA/ICPI Design Awards of Excellence program is judged for how well the project has met the original purpose and objective. Scoring is weighted individually and projects are not judged in competition with each other. Document how the following themes may have been integrated into the design process for the project.

- Design Resolution **– Project demonstrates exemplary skill and sensitivity in the resolution of formal, functional and technical requirements.**
- Environmental Advancement **– Project demonstrates a commitment to environmentally sensitive design and conservation.**
- Preservation/Restoration **– Project demonstrates skill, sensitivity and thoughtfulness in preservation, restoration or the alternate reuse of an existing building regardless of its original architectural intentions.**
- Societal Advancement **– Project demonstrates a commitment to social progress.**
- Technical Advancement **– Project explores new technologies and their architectural implications.**
- Sustainability **– Project demonstrates and promotes sustainability through the use of concrete masonry products.**
- Other

Photography

Seven or more digital photographs (300 dpi minimum on CD-ROM) or professional slides are required with the binder. In addition the site plan and floor plan(s) are also required. Each digital photograph, professional slide, site plan or floor plan must be printed in a 8 x 10 inch [203 x 254 mm] or 8.5 x 11 inch [216 x 279 mm] glossy color print and inserted into the open pockets at the back of the binder. Pages may not be added to the binder, but both sides of each page may be used. Do not submit low-resolution print-outs, color photocopies, or magazine reprints.

Commercial and Residential Submissions Requirements

Photographs must be professional in appearance and quality and shall include a minimum of one photograph of each exposed side of the building and one photograph showing the context of each exposed side of the building (may be omitted if the project's relationship to its context is defined clearly in other prints). For a group of buildings, provide a minimum of one photograph which illustrates the complete project, including its relationship to its environment. For projects involving exterior alterations, provide a minimum of one photograph of each altered (exposed) side, and a minimum of one photograph of the same side before alteration. All projects must provide a minimum of one photograph showing the interior aspects of the building. If concrete masonry is a primary interior building material, supply images to illustrate the product's use. The photographs submitted must total or exceed five.

In addition, a small-scale site plan and floor plan, showing the project and its context, must be provided. Plans can be drawn at any scale in any medium, but the scale must be indicated graphically. All plans must be on 8.5 x 11 inch [216 x 279 mm] sheets placed in the binder's transparent window sleeves. Please note: over-size or folded plans will be discarded without consideration.

Landscape Submissions

Photographs must be professional in appearance and quality and shall include a minimum of one photograph showing the overall environment of the project and one photograph showing the context of each element of the project (may be omitted if the project's relationship to its context is defined clearly in other prints). Additional photographs include a before and an under construction photograph, to illustrate the project's significant alterations. The photographs submitted must total or exceed five.

In addition, a small-scale site plan, showing the project and its context, must be provided. Plans can be drawn at any scale in any medium, but the scale must be indicated graphically. All plans must be on 8.5 x 11 inch [216 x 279 mm] sheets placed in the binder's transparent window sleeves. Please note: over-size or folded plans will be discarded without consideration.

Please make sure all requested items are submitted with your entry.
Incomplete information may cause delays in the processing of your submission.

NATIONAL CONCRETE MASONRY ASSOCIATION
Sustainable Concrete Products for Structures and Hardscapes

ICPI
INTERLOCKING CONCRETE PAVEMENT INSTITUTE ®

Entry form

The 2011 NCMA/ICPI Design Awards of Excellence

Complete or photocopy this form and send it to the address below or e-mail to: jrutkowski@ncma.org along with the $200 entry fee, no later than June 15, 2011.

NAME: _____

FIRM NAME: _____

STREET ADDRESS: _____

CITY: _____

STATE: _____

ZIP: _____

PHONE: _____

FAX: _____

E-MAIL (IF AVAILABLE): _____

PROJECT NAME: _____

PROJECT CLIENT: _____

DATE OF PROJECT COMPLETION: _____

PROJECT TYPE: (circle one) Commercial Residential Segmental Retaining Wall Pavers Sustainability

Make checks payable to: The 2011 NCMA DESIGN AWARDS OF EXCELLENCE

___Visa ___MasterCard ___American Express

ACCOUNT #: _____

EXPIRATION DATE: _____ SECURITY CODE: _____

SIGNATURE OR RETURN E-MAIL ADDRESS: _____

Design Awards of Excellence
13750 Sunrise Valley Drive
Herndon, VA 20171

ANALYTICAL TOOLS FOR LIMIT DESIGN OF SHEAR WALLS

Andres Lepage and Reynaldo Sanchez, The Pennsylvania State University, Department of Architectural Engineering

This article describes ongoing work on an NCMA Education and Research Foundation Grant, Titled: Limit Analysis for Limit Design. The Research is being completed by Andres Lepage and Reynaldo Sanchez of The Pennsylvania State University.

Several design methods are available in the TMS 402/ACI 530/ASCE 5 (MSJC) Code for reinforced masonry shear walls using either allowable stress design or strength design. These methods are well suited for specific types of rectangular walls but are often difficult to apply in cases of irregular wall configurations.

Current design procedures generally focus on the response of wall segments without careful consideration of the global system response characteristics that may severely affect local component demands and may lead to either impractical solutions or deficient designs incapable of meeting the desired performance.

An effort is underway aimed at adding a new seismic design method into the MSJC Code for the design of reinforced masonry shear walls. The proposed limit-design methodology combines linear-elastic analysis with concepts from displacement-based design to determine the base shear strength and component deformation capacities that may be safely assigned to a masonry wall configuration.

The main goal of this research project is to develop limit-analysis tools to support the introduction of the proposed limit-design methodology. The objectives of the study include: (a) evaluate practical modeling approaches for determining the limiting base-shear strength associated with the in-plane shear and f exural strengths of walls subjected to lateral loading; (b) to provide a set of rules for determining the controlling mechanism and corresponding deformation demands on the participating wall segments; (c) to investigate pathways for incorporating the analysis method into commercially available software, and (d) to facilitate the implementation of the proposed methodology into the seismic design provisions of model building codes.

Trial designs have indicated that limit design provides advantages over the design procedures currently available in the MSJC code. Limit design allows a more realistic and direct assessment of the deformation demand versus deformation capacity of wall segments in irregular masonry wall configurations and generally leads to design alternatives that are practical, economical, and more likely to meet the intended performance. It is expected that this research will trigger a series of activities that need to target a broad audience: engineering students, design practitioners, building officials, and code development organizations. These activities will advance and promote the design and construction of reinforced masonry walls around the world. CMD

Steve Dill from KPFF Consulting Engineers, David McLean from Washington State University, and Jeff Dragovich from NIST, serve on the project advisory panel.

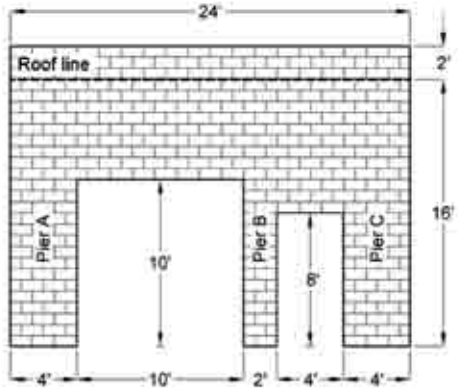

(a) Wall with openings

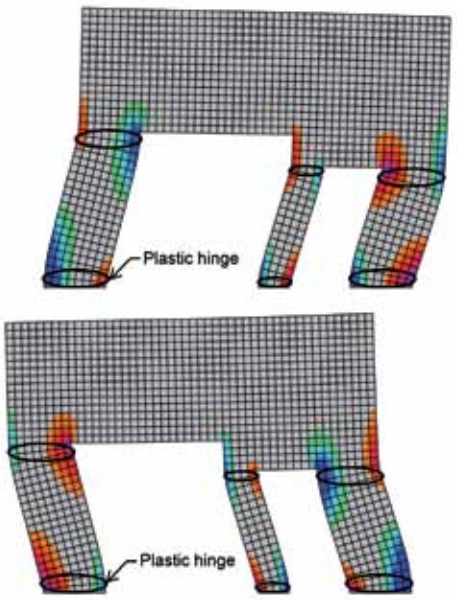

(b) Model and mechanism

Figure 1: Practical analytical tools are needed to help designers identify the controlling mechanisms for a variety of reinforcement options

NCMA/ICPI Safety Award Winners announced

For the fifth year in a row, NCMA and ICPI partnered together to recognize the concrete masonry, SRW, and concrete paver manufacturers with the best plant safety records. Nearly 130 member facilities entered the program this year, and were recognized during the NCMA Annual Convention in Las Vegas.

"We continue to see great strides being made by our members, and by their highly dedicated production and safety personnel," said Mark Wilhelms, immediate past-chairman of the board of NCMA. "In what is an inherently dangerous manufacturing process, I think it is very important to stand up and recognize these folks and their facilities, which log tens of thousands of hours and can boast zero or near-zero recordable injuries."

The NCMA / ICPI Safety Awards Program is open to all production or manufacturing facilities of Producer or Associate Members of NCMA or ICPI in good standing during the reporting period of January 1—December 31. Each facility enters individually, and eligibility is limited to facilities with production or manufacturing personnel on their Occupational Safety and Health Administration (OSHA) 300 logs or equivalent Canadian injury reports.

MILESTONE SAFETY AWARD
The Safety Award Program's Top Honor! Awarded to NCMA or ICPI Producer or Associate member facilities with five, eight, or ten consecutive years of Safety Awards Program entries with zero OSHA (or equivalent Canadian injury report) recordable injuries

Winner: OLDCASTLE 4D/SCHUSTERS—MIDLAND for five consecutive years of ZERO recordable injuries!

PLATINUM SAFETY AWARD
Awarded to any (and all) NCMA or ICPI Producer or Associate member facilities with zero OSHA (or equivalent Canadian injury report) recordable injuries during the award reporting period.

Anchor Block Co.
- Anchor Mold & Tool Co.
- Zenith Products Division

Basalite Concrete Products, LLC
- Basalite Corona (Simmons Brick)
- Columbia Rooftile
- Patterson Whittaker
- Basalite Sparks
- Basalite Portland

Besser Company
- Holland

Block USA
- Anniston Plant
- Carrollton Plant
- Conpave Plant
- Defuniak Plant
- Dothan Plant
- Fayetteville Plant
- Florence Plant
- Jackson Plant
- Jasper Plant
- Little Rock Plant
- Marietta Plant
- Pelham Plant
- Pensacola Plant
- Sylacauga Plant
- Birmingham

- Theodore Plant

CEMEX
- Bushnell Block Mfg.
- Cocoa Mfg.
- Davenport Mfg 1
- Daytona Block Mfg.
- Four Corners Arch Mfg.
- Franklin Block/Bldg Materials
- Hendersonville Block
- Hickory Block
- Holly Hill Pavers
- Lakeland Paver Plant
- Naples Mfg Plant 4089/4090
- Palmetto Mfg.
- Riviera Block–1179
- Riviera Block–1182
- Riviera Mfg. Shop
- South Jacksonville Mfg.
- Spartanburg Pavers
- Waters Avenue Block Plant
- Winter Park Block
- Zephyrhills Mfg. 1207
- Charlotte Block
- Colfax Block
- Anderson Block

Featherlite Building Products
- Lubbock–703
- Abilene–704
- Converse–706
- Dallas–726

Fizzano Bros. Concrete Products Inc.
- Malvern Plant

Flagstone Pavers Inc.
- Brooksville

Hinkle Block & Masonry Products
- Allen, KY Plant
- Richmond, KY Plant
- Somerset, KY Plant

Meade Concrete Products Inc.
- Nicholasville Block Plant

Midwest Block & Brick
- Springdale, Arkansas Plant
- Jefferson City Block Plant
- Kansas City Block Plant

Oldcastle–4D/Schuster's
- Berea
- Midland
- Bridgeport
- Sheffield

Oldcastle–Adams Products
- Adams Products Castle Hayne
- Adams Products Cowpens
- Adams Products Dunn
- Adams Products Greensboro Vault

Oldcastle–Anchor Concrete Products
- Arthur Whitcomb
- Betco Supreme–Leesburg
- Betco Supreme–Crofton
- Betco Supreme–Winchester
- Betco Supreme–Gainesville
- Binkley & Ober–Manheim
- Binkley & Ober–Cochranville
- Domine Builder's Supply
- Lehigh Valley Block
- Lyndhurst
- Phillipsburg
- Trenwyth Industries

Oldcastle–Georgia Masonry Supply
- Augusta
- Cornelia
- Macon

Oldcastle–Northfield Block Co.
- Romeoville

Oldcastle–Sierra Building Products
- Stockton

Oldcastle–Superlite Block
- Administration/ Transportation
- Crego Block Mine
- Crego Block, Santa Fe
- Darling Mine
- Deer Valley
- Gilbert
- Lone Butte
- Needles
- Tri Delta
- Young Block, Sierra Vista
- Yuma
- Phoenix
- West Phoenix

Oldcastle APG Texas, Inc. Jewell Concrete Products
- Rosenberg

Oldcastle Architectural Inc.
- Amcor Masonry Products

Oldcastle Architectural Inc.–West, Central Pre-Mix Concrete Products Co.
- Portland Facility
- Kent Facility
- Spokane Facility

Oldcastle Coastal
- Jacksonville Plant
- Orlando Plant
- Valkaria Plant
- Ft. Pierce Plant
- West Palm Beach Plant
- Zephyrhills Plant

Oldcastle Miller Materials
- Miller Materials–Kansas City

Oldcastle Rhino Materials
- Rhino Materials

Rogers Block
- Indy

CATEGORIES

Determined by total number of hours worked at a facility are as follows:
Category I—0–40,000 hours
Category II—40,001–80,000 hours
Category III—80,001–140,000 hours
Category IV—140,001–200,000 hours
Category V—200,001+ hours

GOLD SAFETY AWARD

Recognizes the member facility with the best, non-zero recordable-injury incidence rate in each category.
Gold Safety Award Winners
- Anchor Block Co.
  Anchor Block South Plant facility, Category III
- Basalite Concrete Products, LLC
  Basalite Carson facility, Category III
- Basalite Concrete Products, LLC
  Basalite Denver facility, Category III
- Basalite Concrete Products, LLC
  Basalite Dixon facility, Category V
- Besser Company
  Proneq/Montreal facility, Category II
- Besser Company
  World Headquarters facility, Category V
- Calstar Products, Inc.
  Racine, Wisconsin facility, Category I
- Oldcastle—Anchor Concrete Products
  Easton facility, Category III
- Oldcastle—Sierra Building Products
  Fontana facility, Category III
- Oldcastle—Northfield Block Co.
  Morris facility, Category V
- Oldcastle—Superlite Block
  Trenwyth Industries facility, Category II
- Peerless Block & Brick Co.
  St. Albans facility, Category IV
- Shouldice Designer Stone
  Ontario, Canada facility, Category V

SILVER SAFETY AWARD

Recognizes the member facility with the second-best non-zero recordable-injury incidence rate in each category.
Silver Safety Award Winners
- Besser Company
  CMC/California facility, Category I
- Oldcastle–Adams Products
  Morrisville facility, Category IV
- Oldcastle Miller Materials
  Bonner facility, Category II

ASSOCIATION NEWS

NCMA PROPOSES NEW BLOCK CONFIGURATION TO ASTM

ASTM C90, first published in 1931, has been the predominate standard for the specification of loadbearing concrete masonry units in the U.S. for decades; ensuring the physical attributes of concrete masonry units meet with the high quality performance expectations of concrete masonry construction. Some of the prescriptively-derived requirements currently contained in ASTM C90, however, have not changed in more than a half-century and as a result have lost pace with production technology, design trends, and building code demands. Case in point—ASTM C90 currently requires an equivalent web thickness (the amount of web material connecting the two face shells) that is based on production-oriented limits from the 1940s and 1950s rather than contemporary design demands. To reflect the multitude of production technology advances implemented over the past 50 years and to provide producers and designers with more flexibility in using alternative unit configurations, NCMA has forwarded a substantial change to ASTM that effectively reduces the minimum web requirements by up to 75%. Other unit properties, including face shell thicknesses, would remain unchanged. If accepted by ASTM, the benefits associated with a reduced web configuration concrete masonry unit are numerous, including:

- reduced material use and transportation costs;
- lighter units increases construction productivity and reduces fatigue and injuries for masons;
- larger cell areas reduce congestion and facilitate grout placement; and
- improved thermal properties, whereby R-values could increase by a factor of 3 to 4.

Such a radical change is not without its challenges, however, and may drive new industry recommendations on unit handling to minimize breakage, alternative grout placement procedures to reduce blowouts, and changes to design tools that are influenced by unit configuration including fire resistance, sound transmission, and structural resistance. For more information on these proposed changes to ASTM, please contact Jason Thompson (jthompson@ncma.org) or Nick Lang (nlang@ncma.org).

PAUL HARGEST RECEIVES NCMA INDUSTRY LEADERSHIP AWARD

The National Concrete Masonry Association bestowed an elite honor on Paul Hargest of Boehmer's/Hargest Block Ltd. in recognition of his outstanding leadership within the industry during its annual convention in Las Vegas recently. The award was presented by 2010 NCMA Chairman Mark Wilhelms who said "Paul Hargest has truly emerged as a visionary for the concrete masonry industry. He has provided exceptional leadership for the Canadian producers, been instrumental in forging relationships between the US and Canadian concrete masonry industries, and served as an inspiration for demonstrating how an industry can take great pride in investing in itself and working together to achieve its market objectives." In addition to his business role as CEO for Boehmer's/Hargest Block, Hargest is also the executive director for the Canadian Concrete Masonry Producers Association (CCMPA).

BETA VERSION OF NCMA PLANT CERTIFICATION PROGRAM RELEASED

In an effort to gage the need as well as content of an industry-specific plant quality control certification program, NCMA has released a BETA version of a draft plant certification program and is actively soliciting feedback and comments on this concept program. The current draft of this quality control certification program is available for review in the resources section of www.ncma.org. The certification program, which is a voluntary compliance option for producers of concrete masonry and hardscape products, outlines the minimum requirements of a quality control process plants may choose to implement where markets or users desire a higher degree of quality control documentation. As a BETA draft intended to generate feedback and comments, NCMA will not be certifying plants to this program nor can plants claim compliance to this program. Those with comments to the BETA quality control certification program are encouraged to send them to Jason Thompson (jthompson@ncma.org). All feedback received will be discussed by NCMA's committees this summer.

NCMA RELEASES PERFORMANCE GUIDELINES FOR CONCRETE MASONRY UNITS

For nearly a century, the concrete masonry industry in North America has manufactured products to comply with the requirements of ASTM

C90, *Standard Specification for Load-bearing Concrete Masonry Units*, or an equivalent standard (such as ASTM C145 or CSA 165.1). It has long been recognized that meeting all of the requirements of ASTM C90 (physical as well as material) ensures satisfactory performance of the product in service. Meeting all of the requirements of ASTM C90 also inherently demonstrates that such concrete masonry units will exhibit the intrinsic properties that are commonly associated with concrete masonry; such as durability and fire resistance.

As a standard, ASTM C90 is written to apply to the majority of concrete masonry products produced. It cannot, however, apply to all products in all situations as compliance testing would become too expensive and too onerous for commonly produced products with a proven track record. In the case where the use of alternative materials is desired (such as incorporating recycled materials into concrete masonry units) ASTM C90 may not adequately address all the evaluation and assessment procedures that may need to be considered when incorporating alternative constituent materials.

Recognizing these limits in current ASTM standards, NCMA has developed a series of guidelines that set recommended assessment and performance criteria for producers considering the use of alternative materials in concrete masonry unit production. These guidelines, which are available for download on the "Resources" page of www.ncma.org, provide producers with the background and tools necessary to assess the impact a substantial change to the materials used to produce a concrete masonry unit may have on the performance of such units when in service. For more information on these performance guidelines, please contact Jason Thompson (jthompson@ncma.org).

CMU CHECK-OFF TOWN HALL DRAWS A CROWD

Over 100 people attended a town

IN MEMORIAM

BUTCH HARDY

Herman "Butch" Hardy died Sunday April 24, 2011, surrounded by his loving family. He was born May 31st, 1946 in Lenoir Co, graduated from East Carolina University with a B.S. Degree in Business Administration, and served in the US Army in Vietnam from 1969 to 1970, where he received the Army Commendation Medal. He worked with Adams Products Company for thirty-eight years, serving as Company President for seventeen years. During his career with Adams, he received numerous awards, including: National Masonry Instructors Hall of Fame; NC Masonry Instructors Association Mason Man Award; Outstanding Service to the NC Mason Contractors Association; recipient of the NC State University School of Design's Wings on Wings award recognizing significant contributions to the School of Design Community, and numerous other awards from the National Concrete Masonry Association. He was also past President and Chairman of the Board of the Carolina Concrete Masonry Association. Butch was an avid fan and supporter of East Carolina University athletics. Survivors include a large extended family. Flowers are welcome, or contributions may be made to Skill Creations of Kinston, c/o Adams Products, Attn. Nancy St. John, 501 Patetown Road, Goldsboro, NC 27530. More information—www.brownwynnecary.com.

PETE ALEXANDER

We extend our sympathies to the family of Pete Alexander who, at the age of 47, passed away on 1 May 2011. Pete earned an associates degree in Concrete Technology from Alpena Community College (ACC) in 1988. He worked for Betco Block in Virginia and Grand Blanc Cement Products in Michigan before returning to Alpena to become a technician in the ACC concrete products laboratory in 1996. In 2000 he began working for Besser Company as a training specialist. He left Besser for health reasons in 2008. Quick with a smile and eager to share his knowledge Pete was a tremendous ambassador for Besser Company and the industry. He travelled the globe installing and servicing Besser equipment as well as training plant personnel. He also was involved in testing materials and products in the lab and producing prototype products in the plant. Pete is survived by wife Debra. More information, http://www.thealpenanews.com/.

hall meeting held in conjunction with ICON Expo and the CON-EXPO / CON-AGG shows in Las Vegas to find out more about how a check-off program could help expand concrete masonry markets. Major Ogilvie, a representative from BlockUSA that is chairing the industry effort, hosted the event. Participants were provided with background that led the industry to undertake such an initiative, examples of successes from industries have implemented similar programs, and a preview of how a concrete masonry check-off program is envisioned to operate. The session concluded with a lively questions and answers session. The industry will continue its communications and outreach efforts regarding the program while pursuing authorization for implementation. Refer to the dedicated website for additional information: www.cmucheckoff.com

THOMPSON NAMED NCMA VICE PRESIDENT OF ENGINEERING

The NCMA Board of Directors approved Jason J. Thompson as its new Vice President of Engineering. Thompson, a structural engineer that has been with NCMA for 14 years, received the appointment during NCMA's Annual Convention last week in Las Vegas. He has served in many leadership capacities on behalf of the association and the masonry industry including the chairman of the Masonry Alliance for Codes and Standards and secretary of the Masonry Standards Joint Committee. He has also been recognized through several awards including receiving ASTM's Alan H. Yorkdale Award for the best technical paper regarding masonry written in the English language on three separate occasions. He currently manages NCMA's technical and research activities.

ASCE HONORS DENNIS GRABER WITH LIFE MEMBER AWARD

The American Society of Civil Engineers (ASCE) bestowed the honor on Dennis Graber, NCMA Director of Technical Publications, at the meeting of the National Capitol Section meeting on April 19. Graber has maintained his membership in ASCE since graduating from college and has served on several ASCE national committees throughout his professional career. The presentation was made by Kathy Caldwell, President of ASCE National.

NCMA WELCOMES NEW PRODUCER MEMBER A-1 BLOCK CORPORATION

Please join us in welcoming our newest member aboard! A-1 Block Corporation, 1617 Division Ave. S, Orlando, Florida 32805, 407-422-3768, www.a1block.com. Sponsors: Bill Oberfield, Oberfield's Inc., and Columbia Machine.

INDUSTRY NEWS

4TH ANNUAL HNA HARDSCAPE PROJECT AWARDS NOW OPEN!

The Hardscape North America Hardscape Project Awards is now accepting projects to be considered for this year's contest. The awards recognize outstanding hardscape projects by contractors in commercial/industrial, residential and transportation/municipal street applications. These projects may include but are not limited to walkways, patios, driveways, plazas, parking lots, roadways, etc. For more information, log on to www.hardscapeNA.com/HNAawards .

NCMA MEETINGS AND ICON EXPO NEWS

SAVE THE DATE—2011 NCMA MIDYEAR & ICPI SUMMER MEETING

The National Concrete Masonry Association (NCMA) and the Interlocking Concrete Pavement Institute (ICPI) will join together to conduct their 2011 summer midyear meetings, August 24–28 at the Hyatt Regency Vancouver Hotel. Committee meetings will be coordinated so that members are able to attend meetings of both organizations. Additional events will include the NCMA Business Luncheon and PAC Reception and a combined joint NCMA/ICPI Member Networking reception and NCMA/ICPI Golf Tournament. Important travel informaiton—You must have a valid passport or alternate approved travel document to enter or depart the United States. This process can take time, so if you do not have a passport or alternate approved travel document, please apply now so that you are prepared to travel at the time of the meeting. For more information on travelling between the United States and Canada, please visit the following website http://canada/usembassy.gov.

THE PRECAST SHOW 2012 FEATURING ICON EXPO HEADS FOR ORLANDO!

It is never too early to plan your participation and attendance, and in 2012 this show brings back together the major industry components to create the ONLY show in North America and the largest annual show in the world geared exclusively to

the manufactured concrete products industry! In 2012, the Precast Show will include PRECAST, PIPE, MASONRY AND HARDSCAPES, and is not to be missed. The show will include exhibition, education and networking events, coinciding with association meetings and annual conventions. The host hotel is Shingle Creek Resort. Previous MCPX and ICON EXPO exhibitors have been contacted for priority booth placement, and open sales have already begun, with the major exhibit sales campaign beginning after Memorial Day. The f oor is already 80% sold and is expected to sell out, however, priority ranked exhibitors still have time to secure ideal location in one of the three distinct pavilions, visit www.theprecastshow.org or contact Brenda Ibitz at bibitz@precast.org.

FOUNDATION NEWS

NCMA FOUNDATION AWARDS OVER $98,000 IN NEW GRANTS

The NCMA Education and Research Foundation at its meetings last week in Las Vegas, NV approved eight new grants and student design competitions to various universities and other institutions, totaling over $98,000. Those programs funded include the following:

Grants:

- Mason Contractors Association of America for MILCON Ph. II—$20,000
- The Masonry Society for Sustainability e-Newsletter—$1,200
- Clemson University for Student Verification of Structural Masonry Design Software Version 6—$8,000
- Ensoltec, Inc. for Direct Design Software—$30,000
- Brigham Young University for High Replacement of Portland Cement in Masonry—$19,250
- University of Wyoming for Plastic Shrinkage Research Phase II—$6,100

Student Design Competitions:

- Florida Atlantic University—$7600
- Ball State University—$6,000

New grant submissions will be considered at NCMA's Midyear Meeting in Vancouver, BC in August. The submittal deadline the next round of grant applications is July 1, 2011. Forms and more information on submitting a grant application are posted on the NCMA Foundation web site at www.ncma.org/foundation or you can contact NCMA Director of Technical Publications Dennis Graber at dgraber@ncma.org.

MILCON RESEARCH PROJECT TO RECEIVE FUNDING FROM NCMA FOUNDATION

MCAA and NCMA have partnered for a research project to address questions raised in an April 2010 report published by the General Accountability Office (GAO) titled DOD Needs to Determine and Use the Most Economical Building Materials and Methods When Acquiring New Permanent Facilities (GAO-10-436). The GAO report was a result of industry pressure stemming from the Department of Defense decision to replace durable masonry construction with other systems and materials that have a perceived lower cost of initial construction. When taking long-term maintenance and operating costs into consideration, however, the short-term goal of reducing the initial cost of construction may be unjustified. In their report, the GAO concluded:

…it is not clear that the Army's expanded use of wood materials and modular building methods will achieve the Army's intended purpose of reduced facility costs over the long term. The Navy and the Air Force generally disagreed with the Army's view and believed that the use of wood materials and modular construction will result in facilities with shorter service lives and higher life-cycle costs. However, none of the services had the analyses to support its views.

As a result of this study, the GAO concluded with the following recommendation:

GAO recommends that the Department of Defense (DOD) determine the merits and long-term costs from the use of alternative building materials and methods and subsequently revise its military construction guidance, as deemed appropriate. DOD generally agreed with the recommendations.

The MILCON project will study multiple construction types and methods including, wood, concrete, steel, masonry, and wood modular construction to document taking into consideration initial cost of construction, timeline, sustainability, antiterrorism design, and life-cycle costs. The study slated to be completed by early Fall 2011 is expected to support the industry position that masonry is the preferred material and method of construction in addressing the questions raised by the GAO report. For more information on this project contact NCMA Vice President of Engineering Jason Thompson jthompson@ncma.org or NCMA Director of Technical Publications Dennis Graber at dgraber@ncma.org. CMD

LOCKDOWN with CoreLock (Pat. pending)
the Secured Rebar Positioner

Available for 8" and 12" block!

- *Corelock is "seated" 1.25" deep into core.*
- *Eliminates movement of positioner during block installation.*
- *Diagonal placement in core insures rebar is always automatically centered.*
- *Does not interfere with wire reinforcement.*

Charlotte, NC
800.849.6722

Memphis, TN
800.441.8359

www.wirebond.com
INNOVATION IN MASONRY CONSTRUCTION

OMNIA ENGINEERING

SAVE FUEL, INCREASE YIELDS WITH CONSOLIDATED UNIT

Complete Vapor Curing Systems Heats Mixing Water, Heats the Plant
Highest Efficiencies, Lowest Cost

Get the Facts
1-800-541-9516
www.omniaconcrete.com

world class equipment and world class service!

microwave moisture measurement for the concrete industry

Hydronix

692 W. Conway Rd., Suite 24
Harbor Springs, MI 49740
Tel: (231) 439-5000
Fax: (231) 439-5001
Toll-free in USA and Canada
(888) 887-4884

www.hydronix.com

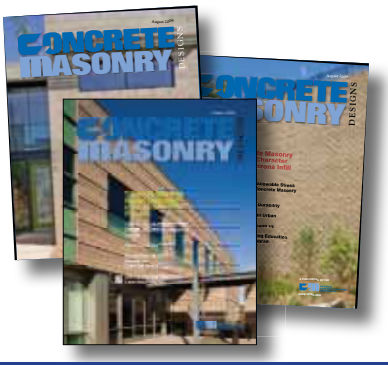

CONCRETE MASONRY DESIGNS ONLINE

- Online Archive
- Subscription Sponsorship Program
- Advertising Opportunities
- Free Electronic Subscription

www.ncma.org

A CM News Archive is Available at www.ncma.org

THE ORIGINAL
www.careercrete.com
Block | Paver | Pipe | Precast | Ready Mix

CONCRETE INDUSTRY ASSOCIATES EMPLOYMENT AGENCY

PO Box 954
Grand Haven, MI 49417
Tel: 616-842-0227
E-mail: geb@careercrete.com

member of NATIONAL CONCRETE MASONRY ASSOCIATION

Have You Taken Advantage of all the resources available on the NCMA web site?

- e-TEK
- Bookstore
- Design Resources
- TEK Technical Information
- Research Reports
- Metric Design Guidelines
- Energy Code Options for CMU
- Sustainability Information
- Technical Services
- Technical Publications Database
- Fire and Acoustics
- Design Awards Program
- Marketing Resources
- Articles for Print and Radio
- Camera Ready Artwork
- Fire Safety Materials
- Mold Materials
- Print Ads
- Safety Resources
- eSafetyLine Software
- Opportunities/Leads
- Helpful Links
- Fire Safety Associations
- Mold Resources
- Workforce Development

VISIT TODAY
www.ncma.org

Marketplace

• Steel Racks
• Steel Pallets

D & M WELDING CO.

• Steel Products
• Sand Hoppers

Domestic & Worldwide Service.

Our company has the experience you are looking for! We have been producing Steel Pallets & Steel Racks since 1973 and are former Concrete Block Producers.

Jeff McCarroll ■ 800 • 860 • 6065 ■ 937 • 293 • 5404 Fax
■ dmwelding@att.net

iwi group LLC

member of
NATIONAL CONCRETE MASONRY ASSOCIATION
NPCA Precast ... The Concrete Solution
American Concrete Pipe Association

Buying/Selling Used Equipment

Block Machines, Block Plants, Batch Plants, Crushers, Forklifts, Front End Automation, Lintel Machines, Mixers, Paver Plants, Precast, Cubers, Racks/Pallets, Roof Tile Machines, Trucks

Contact us for a FREE Brochure!

6069 Oakbrook Parkway, Norcross, GA 30093
Phone: (800) 247-2819 or (770) 840-7060
Fax: (770) 840-7069
e-mail: sales@iwigroup.com
www.iwigroup.com

BLOCK AND PAVER INDUSTRY SPECIALIST

NATIONWIDE SEARCH & RECRUITMENT

• OPERATIONS AND PLANT MANAGERS
• SHIFT SUPERVISORS • MACHINE OPERATORS
• MAINTENANCE • SALES

UNITED EMPLOYMENT GROUP, INC.

Michael S. Stauffer • 610-351-8070 • Cell: 610-417-5503
mstauffer@UnitedEmploymentGroup.com

www.UnitedEmploymentGroup.com

ALABAMA PALLETS

"Your Dependable and Experienced Steel Pallet and Rack Source for the Concrete Block and Paver Industry"

Mike Crancer
Phone: (636) 861-7300
Toll Free: (888) 530-7337
Fax: (636) 861-7335
E-mail: mcrancer@msn.com
www.steelpallets.org

STRATA
Global GeoSolutions

- **HIGHEST QUALITY GEOGRIDS**
- **BEST CUSTOMER SERVICE**
- **COMPETITIVE PRICES**

WWW.GEOGRID.COM

Marketplace Ads are Affordable and Effective.

Let NCMA design one for YOU.

For advertising information, call NCMA 703-713-1900.

AIA Continuing Education Learning Program

Learning Units Reporting Form

AIA Questions (Circle the correct answer)

1. What are the minimum SRW properties recommended by NCMA?
   a. ASTM C140
   b. ASTM C1372
   c. 4,000 psi and 5% absorption
   d. All of the above
2. What is the minimum grid length recommended by NCMA?
   a. 60% of the wall height (H)
   b. 100% of the wall height (H)
   c. 70% of the wall height (H)
3. What backfill material is recommended on AASHTO projects?
   a. On site clays
   b. Organic soils
   c. Granular materials with less than 15 % fines, PI£6 and f³34º
4. What material does NCMA recommend for leveling pad construction?
   a. Unreinforced concrete
   b. Compacted gravel
   c. Reinforced concrete
   d. All of the above
5. What design method was used on the S-Curve Reconstruction SRW?
   a. NCMA
   b. AASHTO LRFD
   c. AASHTO Allowable Stress Design
6. How long did it take to complete the VA military Institute's main wall?
   a. 1 year
   b. 7 months
   c. 3 months
7. SRWs were the only product considered for the VMI project.
   a. True
   b. False
8. 2-inch-minus crushed rock was used to backfill the VMI retaining wall.
   a. True
   b. False
9. The 22 ft grid lengths on a 34 ft high wall follow NCMA's minimum grid length guidelines
   a. True
   b. False
10. What types of SRW units were used on the VMI project?
    a. Regular SRW units and special corner units
    b. Regular SRW units only
    c. 8x8x16 inch CMUs

To receive one learning unit, read "Reconstruction of Dangerous I-59 'S-Curve'" and "Virginia Military Institute Drill Field" and complete the questions on this page. Return this form to the National Concrete Masonry Association.

Return forms before July 2012 to receive learning unit credits.

☐ I am a non-AIA architect or design professional. Please mail me a certificate stating that the learning units earned can be used to fulfill other continuing education requirements.

Send completed Report Form to:
AIA CES, National Concrete Masonry Association,
13750 Sunrise Valley Drive,
Herndon, VA 20171-4662,
or fax to NCMA at 703-713-1910.

If you have questions, please contact NCMA at 703-713-1900.

May | June 2011

AIA Member Information:

Name

Address

City State/Province Zip Code

Phone Fax

E-mail ID Number

I certify that the above information is true and accurate to the best of my knowledge. I have complied with the AIA Continuing Education Guidelines.

Signature Date

☐ Check here to request a catalog of concrete masonry technical literature.

CONCRETE MASONRY DESIGNS

13750 Sunrise Valley Drive
Herndon, VA 20171-4662

A PUBLICATION OF THE
NATIONAL CONCRETE MASONRY ASSOCIATION
WWW.NCMA.ORG

May | June 2011

BEAUTY IS A LOK.

Who says there are no sure things in design? From coast to coast, in residential and commercial applications, the natural looks and rich colors of VERSA-LOK retaining walls are admired and desired. As are the freestanding walls, columns, steps, curves and corners that they make so simple to install. With VERSA-LOK, you have the freedom to create virtually any hardscape imaginable — without using special units. And the results are always the most coveted in town. Beautiful, simple and reliable. That's the VERSA-LOK promise.

To find out why design professionals prefer VERSA-LOK, call **(800) 770-4525** or visit **www.versa-lok.com**.

Freestanding Walls | *Mosaic Random Face Patterns* | *Fully Integrated Stairs* | *Random-Pattern Tall Walls* | *Freestanding Columns* | *Multi-Angle Corners*

VERSA-LOK®
Retaining Wall Systems
Solid Solutions.™

© 2008 Kiltie Corporation • Oakdale, MN