November | December 2011

CONCRETE MASONRY DESIGNS

HNA Design Award Winners

Crossing Lake Sumter

Sacramento Zoo Giraffe Barn

Details for Residential Floor and Roof Connections

NCMA/ICPI Safety Awards

NCMA Technical FAQ

AIA Continuing Education Learning Program

NCMA Crash Course Webinars

January 4, 2012

Safe Rooms, Safe Homes, Safe Communities: Global Solutions using Concrete Masonry

Speaker: Dennis Graber

Earthquakes, wildfires, hurricanes, tornados, and floods – the events of 2011 continue to remind us that all regions across North America are subject to nature's unpredictable fury. Regardless of the natural threat, concrete masonry provides the only universal solution to mitigate damage, protect property, and save lives in a single, economical and aesthetic package. Whether installing a tornado safe room in a home or business; defending against the next wildland fire or devastating flood; protecting an entire community from the damages of an earthquake; or any combination of these events, concrete masonry construction insures the next natural event isn't a disaster. This course will introduce attendees to the resources and tools available through the Federal Emergency Management Agency, Institute for Business and Home Safety, International Code Council, and NCMA that highlight the benefits and applications of concrete masonry construction as a disaster mitigation solution. Cost: $20.

February 1, 2012

Is it a Workmanship or Production Issue?

Speaker: Mike Maroney

Knowing how to assess and address common field problems can be the difference between a highly successful and profitable job; and wishing the other guy won the bid. This course will review commonly encountered field problems and introduce attendees to a systematic approach of determining whether these issues are result of product deficiencies or stem from workmanship defects. Recognizing that everyone's common goal is to quickly and efficiently resolve field issues to minimize project disruptions, course attendees will be introduced to a step-by-step process to getting projects back on track at minimal impact. Cost: $20.

For more information and to register, please visit the *Professional Development* section of www.ncma.org.

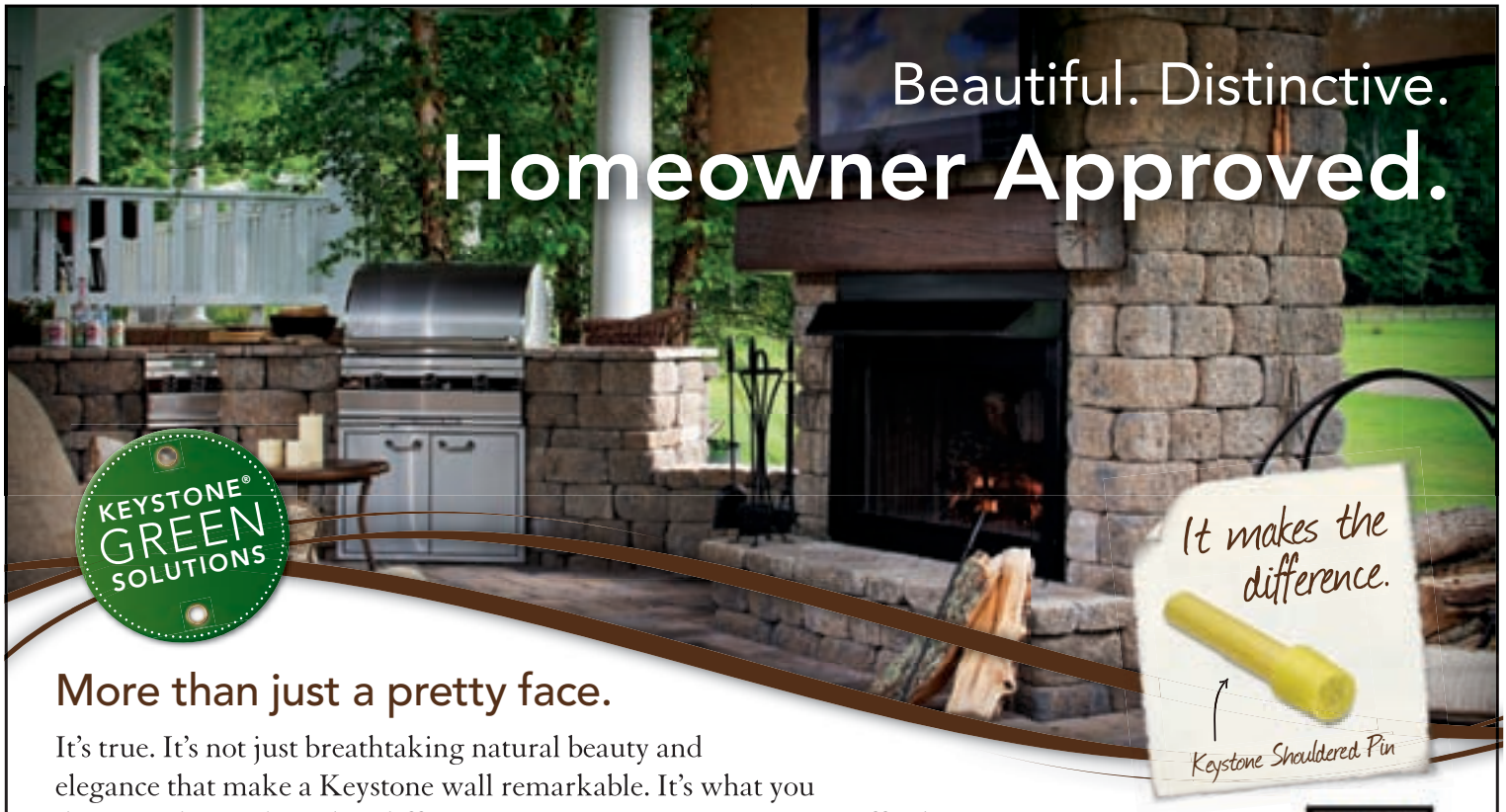

More than just a pretty face.

It's true. It's not just breathtaking natural beauty and elegance that make a Keystone wall remarkable. It's what you don't see that makes a big difference. Our pin connection system affords you unmatched design versatility, strength, and ease of installation. **With Keystone** – you can easily create your very own backyard paradise.

KEYSTONE® RETAINING WALL SYSTEMS A CONTECH COMPANY

To view Keystone's complete line of innovative products and project ideas, visit us online at ***www.keystonewalls.com/adcm.html*** *or call 1-800-747-8971. Keystone is proud to be a subsidiary of CONTECH Construction Products Inc.*

CONCRETE MASONRY DESIGNS

November | December 2011

4 HNA Hardscape Project Award Winners
The Hardscape Project Awards recognize outstanding hardscape projects by contractors in residential and commercial/industrial applications.

8 Crossing Lake Sumter
SRW units with their hand-laid stone appearance, allowed town developers, to build on their vision of quaint, historic-Americana charm for this planned-community site.

10 Sacramento Zoo Giraffe Barn
The new concrete masonry unit barn provides warm nights for the three giraffes, while the expanded grounds allow for leisurely giraffe-size strolls during the day.

13 Details for Residential Floor and Roof Connections
Floor and roof systems for use with loadbearing structural concrete masonry walls serve many primary functions.

29 NCMA/ICPI Safety Awards Program

32 NCMA Frequently Asked Questions
What is the difference between a "cinder block" and a "concrete block"? Are there formal definitions for these products?

17 TEK 1-3D Building Code Requirements for Concrete Masonry

19 TEK 11-12A ACB Revetment Design – Factor of Safety Method

36 News

40 Marketplace

43 AIA Continuing Education Learning Program

Concrete Masonry Designs magazine show-cases the qualities and aesthetics of design and construction using concrete masonry.

Concrete Masonry Designs is devoted to design techniques using standard and architectural concrete masonry units, concrete brick, unit concrete pavers, segmental retaining walls, and other concrete masonry products around the world. We welcome your editorial comments, ideas, and submissions.

Copyright 2011 by the National Concrete Masonry Association. All rights reserved. Contents may not be reprinted or reproduced without written permission from NCMA.

Concrete Masonry Designs is published monthly by the National Concrete Masonry Association (NCMA), and distributed to advance and support the concrete masonry and hardscape industry and public interest.

NATIONAL CONCRETE MASONRY ASSOCIATION
Sustainable Concrete Products for Structures and Hardscapes

Send address corrections and subscription inquiries to:
NCMA Sales and Marketing Department
13750 Sunrise Valley Drive
Herndon, VA 20171-4662
703-713-1900
Fax 703-713-1910
www.ncma.org

Publisher:
Robert D. Thomas

Editor:
Mary Arntson-Terrell, mterrell@ncma.org

Associate Editors:
Dennis W. Graber, P.E.
Gabriela Mariscal

Advertising:
Heidi Weiss, hweiss@ncma.org

HNA HARDSCAPE PROJECT AWARD WINNERS

Winners in the 4th Annual HNA Hardscape Project Awards received recognition by their peers along with their awards at the first HNA Hardscape Project Awards breakfast. The awards breakfast ceremony took place on Friday, October 28th at the Kentucky Exposition Center, Louisville, KY. The Hardscape Project Awards recognize outstanding hardscape projects by contractors in residential and commercial/industrial applications. In its fourth year, the awards program received 84 entries. A total of 16 award winners and 12 honorable mentions were recognized during the breakfast. The Combination winners and Segmental Retaining Wall Winners are shown here.

COMMERCIAL WINNER - SRW

More than 5,000 Square Feet (465 square meters)

Merriam Village
Merriam, Kansas
Contractor: BC Hardscapes, LLC
Manufacturer: Midwest Block and Brick

This project was built using a multi piece SRW system. It consists of five walls. The largest wall supports the north end of the project and stands 40 feet (12.2 m) tall. The shopping center and parking lots sit directly above it. There are columns spaced along the entire length of the wall which are laced into the structure from top to bottom. On top of each integral column is a freestanding column with aluminum fencing between them.

The next wall is the wall that retains the southwest end of the site. It is the tallest of the wall standing at 60 feet (18.3 m) tall. This wall has a car dealership that sits above it. It also has freestanding columns above it with aluminum fencing between them. There is a road that runs between this wall and the next wall which retains the southeast end of the project. It is a tiered wall standing 30 feet (9.1 m) in height. This wall supports the police station and patrol car parking lot for the City of Merriam, KS.

The final two walls support the east side of the project and has a road that runs through the site directly above them. These walls were built approx. 3 feet (0.9 m) above grade to create a planter for landscaping along the roadway. This planter not only creates a beautiful landscape but it was designed to withstand impacts from cars. It serves as an attractive alternative to a guardrail.

This project was built on a demanding schedule. The walls started in the Fall using soil backfill in the reinforced zone. However the project extended into the Winter months and in order to continue construction during the inclimate weather the backfill was switched to clean aggregate. There was over 100,000 tons (91,000 metric tonnes) of gravel used in the reinforced zones of the walls. Some of the geogrids were as long a 50 feet (15.2 m).

COMMERCIAL WINNER - COMBINATION
1,000 – 20,000 Square Feet (93-1860 Square Meters)

Department of Environment & Natural Resources
Raleigh, North Carolina
Contractor: Fred Adams Paving Company, Inc.
Manufacturer: Belgard Hardscapes

The NC Department of Environment and Natural Resources (DENR) is the lead stewardship agency for the preservation and protection of North Carolina's outstanding natural resources. Located in downtown Raleigh, the two-block, multi-use, urban development houses NC DENR Headquarters and the NC Museum of Natural Sciences' Nature Research Center (NRC) as well as a 426 space underground parking deck.

An initial construction obstacle was managing and coordinating product deliveries due to rush hour traffic. This was avoided by 5:00 am deliveries and closing one moving lane.

This project was a challange due to the many lighting fixtures, underground vaults and various utility boxes that had to be cut around as well as elevations that had to be met. Unlike other materials such as poured concrete, unit pavers can be removed and reinstated at the correct elevations whenever any settlement occurs during future additions to the street. The city will likely have an ongoing need to connect new utilities along the sidewalks. Therefore, pavers are the ideal system since they can be picked up, removed and then replaced without patches after repairs. Another benefit of unit pavers is their sustainable repair. They do not crack and do not require disposal, or jack hammers, dump trucks, and concrete trucks that occupy valuable space and parking along downtown streets. Manufactured SRW and paver units rarely suffer from quality control problems and there's no waiting time for on-site curing.

COMMERCIAL WINNER - COMBINATION
More than 20,000 Square Feet (1860 Square Meters)

Base Operations Center
Peterson Air Force Base, Colorado
Contractor: Rocky Mountain Hardscapes
Manufacturer: Pavestone Company

The highlight of the project, the Compass Rose, provides visual interest and orientation for newcomers. The center detail is a combination of plum and buff flagstone, surrounded by non-tumbled cobble shaped pavers. The cardinal point designations were cut and epoxied into a buff flagstone, with plum flagstone used for the intermediate point designations. The cardinal and intermediate points incorporated Holland pavers, while the compass field alternated between antiqued cobble and standard cobble/Holland pavers, alternating in circular and linear patterns.

Colors from permeable pavers in the parking lot and the icon compass provide visual contrast to the adjacent facility. The Aspen groves, simulated dry creek-bed and low water plants reflect the regional context of Colorado. Lot striping and handicapped markings are permanently defined using white pigmented pavers, thus eliminating annual re-painting and enhancing a pedestrian-friendly corridor to the facility.

LEED® elements include: stormwater management (permeable pavers, rain gardens, dry creek detention), low voltage lighting, xeriscaping, and recycled materials (mulches and the asphalt used in the parking lot). The former Base Operations parking lot generated a heat island. This project breaks up its surface with a variety of textures, i.e., colored pavers, planters, a creek-bed, numerous shrubs and ornamental grasses.

COMMERCIAL WINNER - ENGINEERED SRW

Texas DOT 130 Tollway Project
Austin, Texas
Contractor: Boothe Brothers Paving
Manufacturer: Pavestone Company

It was not an easy task for the Texas Department of Transportation to come up with an attractive solution to retain the steep embankments on three bridges along a section of their new SH 130 Toll road in Austin, Texas. They wanted to mimic the rustic natural stone look of the Texas Hill Country while providing an engineered solution. TXDOT landscape architect did just that by using an extensive series of terraced segmental block retaining walls to make the slopes manageable and create planting areas for native vegetation. They utilized a manufacturer's three piece segmental retaining wall system system in a color that complemented the accent color on the bridges. A local paving company of Wimberley, Texas did an excellent job in carrying out the architect's vision. The paving company installed the wall block in twelve different areas with each area having a different wall layout. They faced some challenges in the construction of the walls due to changing slopes and tight wall radii as lower tiers tie into upper tiers. The total area of this project was over twenty-five thousand square feet (2323 square meters). Motorists that take the toll road can enjoy the beautiful combination of hardscape and landscaping as they make their trip around the outskirts of Austin.

RESIDENTIAL WINNER - SRW

More Than 1,000 Square Feet (93 Square Meters)

Tuscany in the Desert
Wickenburg, Arizona
Contractor: Wickenburg Landscape & Irrigation, Inc
Manufacturer: Pavestone Company

This project was designed to address the concerns of integrating an ornate Tuscan style house into the natural Sonoran Desert which surrounds it. The client's foremost concern was to preserve the "rustic desert" feel from a distance while complementing with lush landscaping the area that surrounds the house. The initial phases were designed to add structural support and a sound footprint for the concrete paver driveway, while the final phases were added to enhance the beauty of the landscape. Throughout this project, a continuing challenge was to harmonize the up close and personal feel that accompanied this style of house with a simple and yet almost undisturbed desert which surrounds the project. Protecting the surrounding desert was of particular importance because one wrong move with a piece of equipment would have caused irrevocable damage, and the ground could never be returned to its original state. The client, who is a local custom home builder, was so encouraged by what can be done with SRW units that they have gone on to incorporate them into future projects. The creative uses of segmental retaining wall products, such as this project, help to redefine the industry.

RESIDENTIAL WINNER - COMBINATION

4,000 Square Feet (372 Square Meters) or Less

Lowery Residence
Shawnee, Kansas
Contractor: Ideal Lawn & Landscape
Manufacturer: Belgard Hardscapes & Rockwood

This outdoor room expands a covered deck and uses a wooded lot to create a secluded space for relaxation and entertaining. The homeowner desired a kitchen with ample countertop space, a bar for evening or breakfast seating, a patio built around a flowing water feature, and a fire pit. Construction took place within limited space without disturbing the wooded lot. This required careful staging of only the materials needed for each step of the project. The design transitions from the upper deck to the new lower living space and construction required close coordination with the deck contractor that utilized suspended stone slabs that met a stone landing supported by segmental retaining wall units. A four-piece paver path meets the transition and follows a stream and waterfall to the lower patio. The design mimics the curved covered deck by incorporating a half circle stair as the path meets the patio, as well as a half circle fire pit and a curved seating wall. Abandoning square edges for naturally curved lines meant cutting nearly every stone, as well as stacking in a random pattern. The covered outdoor kitchen makes use of curved walls and countertops seen through the arched deck supports.

RESIDENTIAL WINNER - COMBINATION

More Than 4,000 Square Feet (372n Square Meters)

Miller Residence
Lone Tree, Colorado
Contractor: Rocky Mountain Hardscapes
Manufacturer: Pavestone Company

The developer of this neighborhood is no stranger to concrete pavers, having used them at entrances to other developments and on walkways to their model homes. Expansive soils in the Lonetree development provided an opportunity to showcase interlocking pavers' ability to manage soils without cracking and replacement normal to concrete flatwork. With the prior success of walks and entryways, concrete paver patios and driveways were added to the developer's offerings. Past favorable paver performance culminated in a successful test site at the Miller residence at "The Overlook" in upscale Heritage Hills. Concrete pavers surround the pool deck, fill an interior courtyard, and support walkways and an expansive driveway. The skills of the installation contractor were essential to expanded paver use and they installed the majority of the hardscapes in the development. The company owner was so impessed that he insisted on similar products for his personal residence. The successful outcome at the test site resulted in 110 new homes with permeable paver drives, walkways and patios in the development. CMD

CROSSING LAKE

The town of The Villages, Florida, is a master-planned community built in an area where Florida's sandy and wet soil conditions once appeared too challenging for residential construction. One of the bigger issues in the development of this town was providing a route leading across a large waterway and into the heart of the community.

PROJECT
Lake Sumter Crossing, The Villages, FL
GENERAL CONTRACTOR
Steve Counts, Inc., Belleview, FL
WALL CONTRACTOR
Associated Construction Products, Inc., Tampa, FL
LANDSCAPE ARCHITECT
Jim Holden, Ocala, FL
ENGINEER
Farner Barley, Lady Lake, FL
SRW PRODUCER
Big Rock Building Products, Rockwood, TN
LICENSOR
Keystone

A segmental retaining wall (SRW) system provided a beautifully aesthetic and structurally supportive veneer to a bridge structure built from the a proprietary structural corrugated aluminum plate ellipse system.

SRW units with their hand-laid stone appearance, allowed town developers, The Villages of Lake Sumter, Inc., to build on their vision of quaint, historic-Americana charm for this planned-community site.

Development and expansion on The Villages' 25,000 acre (10,000 hectare) site called for two bridge structures to support a heavily traveled county highway. As part of the original bridge design, a precast structure was originally selected for installation on deep piles due to the very poor foundation soils. Instead, a ten-barrel, horizontal-ellipse corrugated structural system was used requiring only minimal subgrade remediation. The SRW system headwalls then surrounded the bridge

SUMTER

structure. The SRW units added the perfect aesthetic appeal that was desired for this upscale planned-community, and their versatility offered the design and installation freedom necessary to complete this complex and extensive structure.

"One of the major challenges in this project was to maintain uniformity," explained John Bethards of Associated Construction Products (ACP), Inc. "Our crews had to install the wall in sections around each of the elliptical structures. This meant the installation would begin with one or two courses on one side of the bridge between two ellipses. Those courses were backfilled and compacted. The installation crews would then transition to the other side of the highway and lay one or two courses, backfill and compact, on a bridge section between two ellipses on that side. Building would again move back to the previous side and start with one or two courses between the next set of ellipses, and so on."

The project utilized 40,000 square feet (3700 square meters) of the SRW system – over 100 truckloads of units. The final results were two long-span structures, supporting eastbound and westbound traffic, which are reminiscent of classic, early-American, hand-masoned stone arch bridges.

SRW systems offer practical structural solutions to challenging soil retention issues with the beauty, charm, and feel of natural stone – but with the strength, stability, and performance of concrete. And because the SRW units are textured on three sides, they offer design flexibility.

Free standing walls and parapets, curves, coners, columns, serpentine configurations, stairs, tiers, and more can be readily incorporated into any design when using SRW systems. In the case of this Florida bridge project, SRW units teamed with the elliptical corrugated galvanized steel structural plate system to provide an effective and attractive alternative to the originally-planned precast system. CMD

SACRAMENTO ZOO GIRAFFE BARN

The masons installed the block to mimic the spotted coats of the giraffes. A tree motif was built into the the wall design as well.

The Sacramento Zoo opened in 1927 and housed a few bears, cats and birds in small cages. At the time, those quarters were considered appropriate for exotic animals. Through the years habitats have changed to be more species specific. So the animals live in size appropriate habitats and the habitats more closely resemble an animal's native enviornment.

Habitat requirements for giraffes, which range from 17-19 ft (5.2 - 5.8 m) in height and weigh from 2,000 to over 4,000 lbs (900 - 1800 kg), are quite different from other animals. Val, Skye and Goody, Sacramento Zoo's three female giraffes, were living in outdated accomidations. The zoo could not add another giraffe or a male giraffe and breed because the current facility did not allow for their proper care. Plus, the 50 year old building was drafty and didn't provide enough warmth during the winter for animals that are better equipped for a warmer climate.

Exactly one year from the groundbreaking for Tall Wonders, a new habitat for giraffes that is double in size to the old one, the new state-of-the-art facility opened with fanfare. The new concrete masonry unit barn provides warm nights for the three giraffes, while the expanded grounds allow for leisurely giraffe-size strolls during the day. For the very first time, visitors are eye to eye with the stately residents on the 1,100 square foot (102 square meter) raised deck. The elevated platform also provides a magnificent view into the neighboring zebra and ostrich area.

The design intent was to invite the Zoo visitor into the world of the giraffe. The placement of the viewing deck is surrounded on three sides by the giraffe roaming area. The deck is raised and accessed by an elegant dual ramp, transitioning the Zoo visitors into the giraffe's taller world. Adults and children alike meet these incredible animals eye to eye, providing a hands-on and up-close experience that both raises awareness of giraffes and promotes future participation in giraffe conservation efforts. The expansive space,

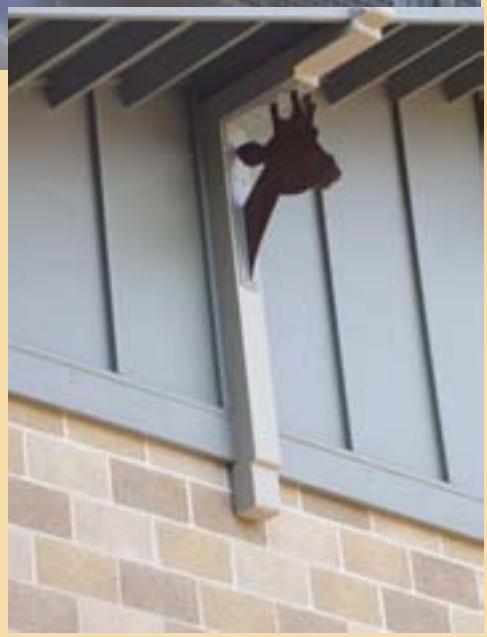

views, and the opportunity to interact with the giraffes is an engaging and rewarding expirence for all Zoo visitors.

The giraffe barn is an all-encompassing and state-of-the-art giraffe care center. Designing the barn involved many of the zoo staff as well as consultation with other zoos and knowledgeable contractors. One stall was specifically designed with quarantine in mind and it is connected to the loading/unloading yard; a holding pen outdoors with a swing wall inside and driveway leading up to it. Animals can be loaded and unloaded safely from special giraffe transport trailers and the yard serves as an outdoor area for the animal in quarantine. The design process involved acquainting the design team with ergonomic and safety requirements necessary to create a space for interaction between the public and the giraffes as well as the special equipment and space required for this unique animals husbandry.

On the medical side, a stall was prepared to hold animals during veterinary procedures and features hot water, outlets, and access to the barns restraint device to facilitate nearly any medical husbandry. The barn's ceilings even feature beams capable of supporting a winch that can hoist a fallen giraffe – a feat difficult for cranes or man-power alone. As a future breeding facility, the barn is also set up for dams and calves to have private holding away from the herd during the offspring's early days. Even the heating and cooling systems were installed in order to cater to the temperature demands of giraffe that help insure their health and well-being.

The barn was built with five stalls, feed storage areas, a utility room for food preparation, an animal unloading enclosure for new arrivals, and an off exhibit area for recuperating animals and newborns. The circulation was designed to allow transfer of animals between stalls as required. The zoo has already introduced a male giraffe to the herd and plans to eventually add another. In the unlikely event that all five giraffes would need to be quaranteened at the same time, the inteligent design of the facility would give them each separate indoor and outdoor space.

A specialized piece of equipment, designed to safely contain a giraffe, was installed to allow keepers to perform inspections of the animal's neck and head while at the same time attending to hoof care. A single roll-up door allows both the lower food storage area and a hay loft to be stocked with food with the use of the zoo's forklift. Openings with metal shut-

PROJECT
Sacramento Zoo – Giraffe Barn Replacement
ARCHITECT
Nacht & Lewis Architects, Sacramento, CA
STRUCTURAL ENGINEER
Beuhler & Beuhler, Sacramento, CA
GENERAL CONTRACTOR
Otto Construction, Sacramento, CA
MASONRY CONTRACTOR
Richard Reynolds Masonry, Oroville, CA
BLOCK PRODUCER
Basalite

ters, located at giraffe eye height, were strategically located to allow staff to interact and perform inspections of the giraffes.

The masons installed the block to mimic the spotted coats of the giraffes. The installation provided a durable/low maintenance finish which was both handsome and whimsical. Low maintenance concrete masonry units were the ideal construction material for the barn because painted surfaces must be kept to a minimum to prevent the animals from ingesting peeling paint. The non-profit status of the zoo required a very tight budget. The funds needed were raised from private and corporate donors and the materials were donated from a local concrete masonry unit manufacturer. Says the architect, "Although humble in nature, this project was truly a community effort for the benefit of the community." CMD

Photography: Chip Allen, Chip Allen Photography

IS YOUR HOME WELL CONNECTED?

Details for Floor and Roof Connections to Concrete Masonry Walls

Floor and roof systems for use with loadbearing structural concrete masonry walls serve three primary functions: they transmit the vertical dead load and live load to the bearing walls; they function as diaphragms, transmitting lateral wind and seismic loading through the walls to the foundation; and they act to support the walls from out-of-plane loads.

In addition to these structural functions, floors and roofs should provide a satisfactory barrier to the transmission of sound, fire, and heat. The many types of floor and roof systems in use today are designed to satisfy all of these requirements in an economical manner.

CONNECTIONS

The transfer of loads between diaphragms and walls requires the proper design and detailing of the connection linking these elements—connections critical to the integrity of a structure. The sample connections detailed here address minimal requirements. Additional requirements may be necessary in some locals, particularly where earthquake and high wind forces are to be resisted. The four primary types of connections, each having specific advantages, include:

- **Direct Bearing Connection** – The direct bearing connection is often the simplest type of connection. This connection is used at the top of concrete masonry walls or when a change in wall thickness provides a ledge with sufficient bearing area as shown in the figure on the right..
- **Pocket Connection** – A pocket connection consists of framing the floor or roof system into a void in the masonry wall. This detail is used when masonry continues above (either as part of the wall or as a parapet) the connection location and eccentricity is to be minimized. Care must be taken to insure that the use of a pocket does not interfere with the continuity of the vertical reinforcement in the wall.
- **Hanger Connection** – When it is desired to maintain the continuity of the wall for structural, aesthetic, or construction reasons, a wall hanger can be used to suspend the roof or floor system. Hangers are generally anchored to a wall through a joint and into a bond beam. However, hangers approved for direct attachment to the surface of a masonry wall are also available.
- **Ledger Connection** – As with hangers, ledger connections minimize the impact on the continuity of a masonry wall. A ledger connection reduces the necessary pre-planning and does not unduly impact the mason's work as opposed to a pocket connection; thereby reducing the number of field modifications.

Direct Bearing Wood Floor Joist

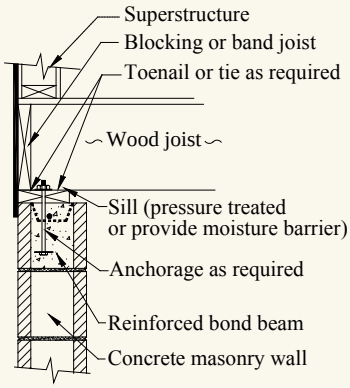

FLOOR AND ROOFING SYSTEMS

Several materials are common to roof and floor construction. **Concrete, wood**, and **steel** are among the most frequently used framing materials in these applications.

Concrete Systems

Concrete slabs can take many forms, including prestressed, precast, and cast-in-place construction. Depending upon the size and number of stories associated with a given project, one concrete framing system may have unique benefits over another. For example, hollow core prestressed slabs can be erected quickly, without the need for formwork or shoring. Where sufficient space is available at the job site, precast slabs can be formed in stacks on-site, starting with the roof slab and using the top surface of the lower slab as the form for the next slab. Once cured, the precast slabs are lifted to their final location. The use of cast-in-place concrete floors and roofs, because of the time needed for forming, pouring, finishing, and curing, requires a building plan which is large enough to permit the masonry work to progress in one part of the structure while the floor in another area is completed.

Concrete Hollowcore at Bearing Wall

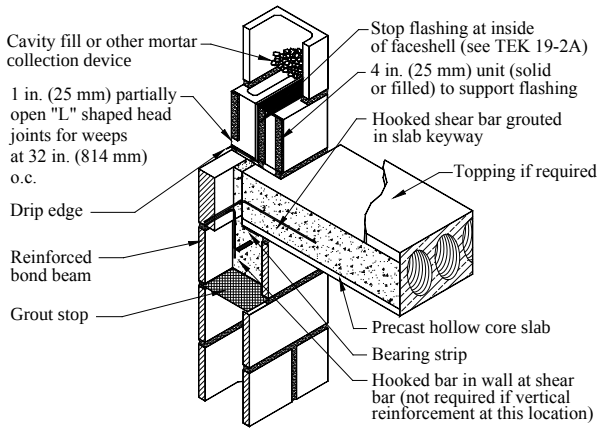

Concrete Hollowcore at Sidewall

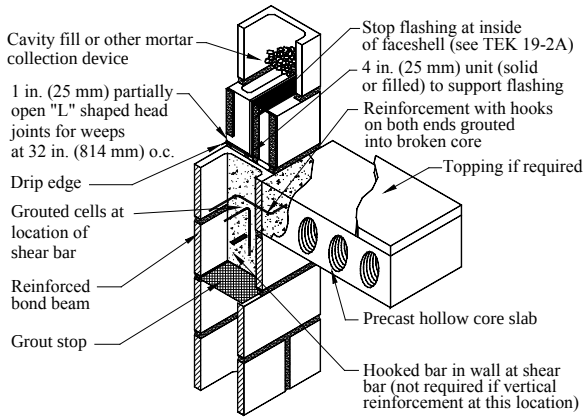

Wood Systems

Wood framed floors and roofs are common in residential and low-rise construction. It is imperative when constructing a wood-framed system that it not be in direct contact with the concrete masonry. Wood in contact with masonry materials may absorb moisture present in the concrete masonry causing the wood to rot. To prevent the resulting unwanted decay, the lumber used should be pressure-treated, naturally decay resistant, or have a moisture barrier placed between the wood and the concrete masonry.

Direct Bearing Wood Floor Joist

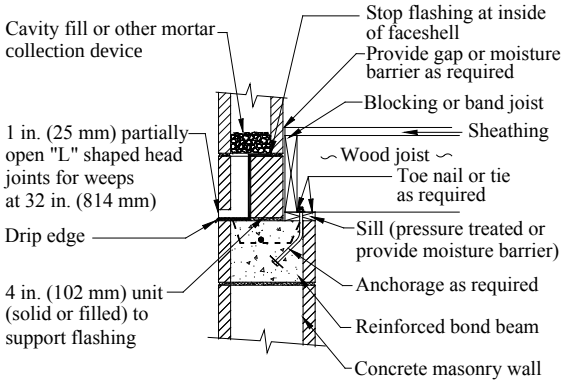

Wood Floor Joist Hanger

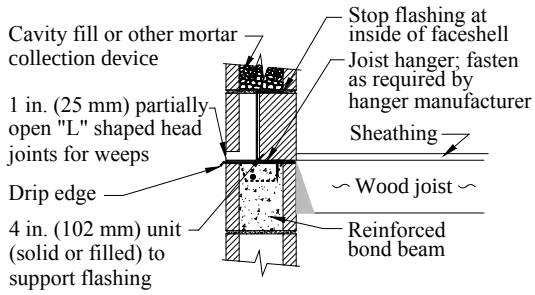

Wood Floor Truss Hanger

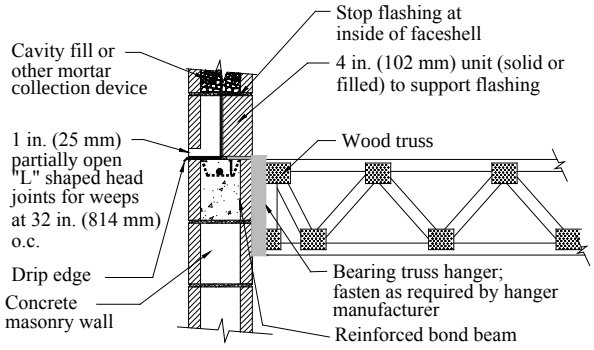

Wood Floor Joist with Pocket

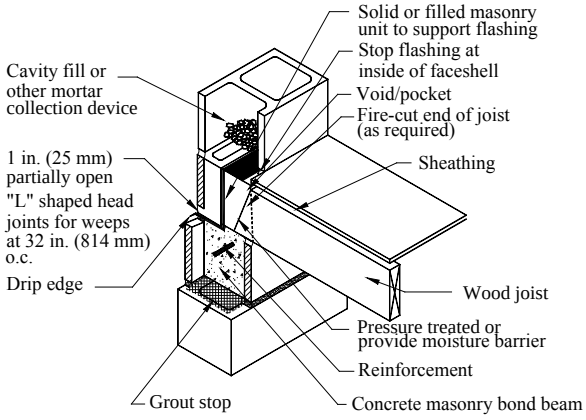

Wood Ledger and Hanger

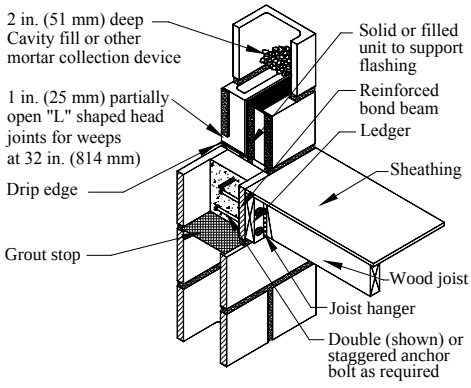

Wood Floor Truss Pocket

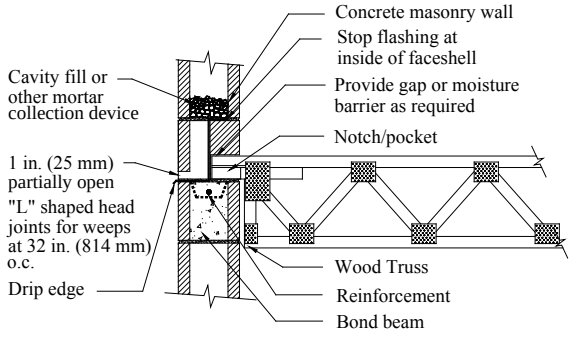

Wood Roof Truss with Top Plate

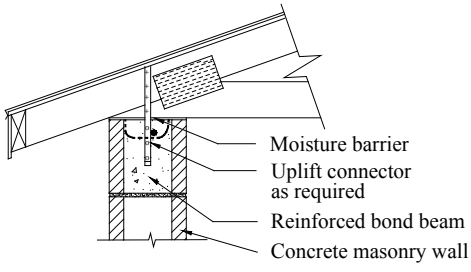

Wood Roof Truss with Embedded Strap Anchor

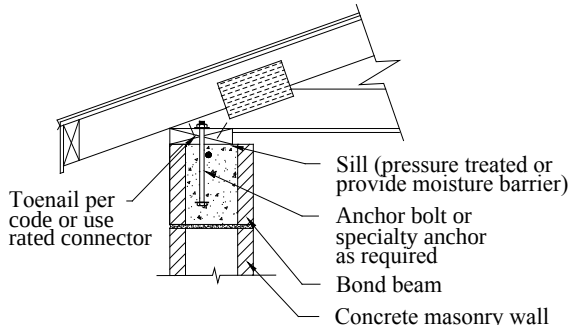

Steel Systems

Steel-framed roofs using steel bar joints are very common in commercial structures because they are capable of spanning long distances. Steel bar joists typically use pocketed or ledger connections to concrete masonry walls. Proprietary systems that use concrete masonry units as a filler between the steel joists are also available.

Steel Joist Direct Bearing on Cavity Wall

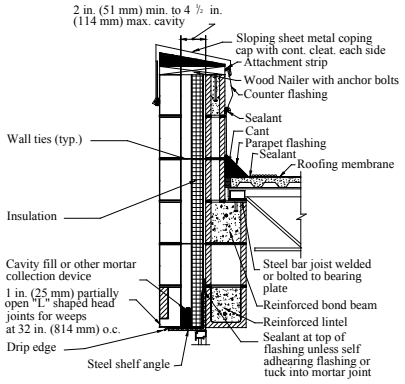

Steel Joist with Pocket

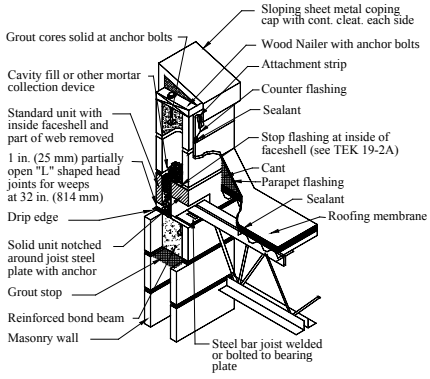

Steel Joist with Ledger Angle

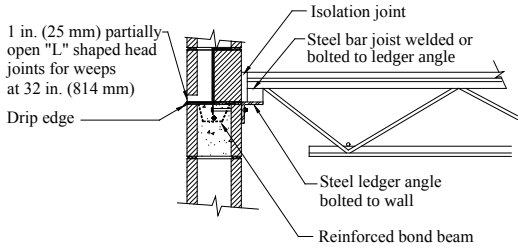

Steel Joist at Sidewall

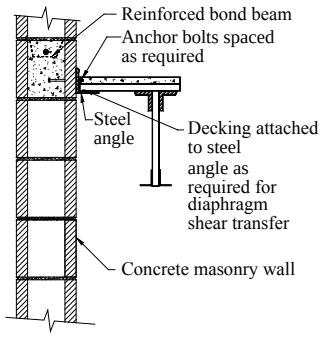

To learn more about Floor and Roof Connections, read NCMA *TEK 5-7A Floor and Roof Connections to Concrete Masonry Walls.* Links to this TEK and other pertinent design and construction TEK can be found on NCMA member web sites at www.ncma.org.

Flashing in Single Wythe Walls

Most of the connections here depict flashing for water penetration resistance which should be used in all exterior walls. Normally flashing is not provided in interior walls. Flashings in single wythe walls, like cavity walls should be positioned to direct water to the exterior. This is normally accomplished using two narrower units to make up the thickness of the wall and placing flashing between them as shown in many of these examples. Care should be exercised to insure that surfaces supporting the flashing are flat or are sloping to the exterior. This can be accomplished by using solid units, lintel or closed bottom bond beam units turned upside down, or by filling cells of hollow units with mortar or grout. Flashing of single wythe walls at lintels, foundations, and bond beams is accomplished in the same manner as shown in the first example on page 14. Throughwall flashing and continuous vapor retarders are other methods used to reduce the passage of water vapor into the wall. Additional information for flashing singlewythe walls, particularly architectural concrete masonry walls, and means for providing a higher level of structural continuity at flashings is contained in TEK 19-2A, Design for Dry Single-Wythe Concrete Masonry Walls *found on NCMA member web sites at www.ncma.org.* . CMD

NATIONAL CONCRETE MASONRY ASSOCIATION
Sustainable Concrete Products for Structures and Hardscapes

ANCHORS AND TIES FOR MASONRY

TEK 12-1B
Reinforcement & Connectors (2011)

INTRODUCTION

Masonry connectors can be classified as wall ties, anchors or fasteners. Wall ties connect one masonry wythe to an adjacent wythe. Anchors connect masonry to a structural support or frame. Fasteners connect an appliance to masonry. This TEK covers metal wall ties and anchors. Fasteners are discussed in TEK 12-5 (ref. 1).

The design of anchors and ties is covered by the *International Building Code* and *Building Code Requirements for Masonry Structures* (refs. 2, 3). These provisions require that connectors be designed to resist applied loads and that the type, size and location of connectors be shown or indicated on project drawings. This TEK provides a guide to assist the designer in determining anchor and tie capacity in accordance with the applicable standards and building code requirements.

DESIGN CRITERIA

Connectors play a very important role in providing structural integrity and good serviceability. As a result, when selecting connectors for a project, designers should consider a number of design criteria. Connectors should:

1. Transmit out-of-plane loads from one wythe of masonry to another or from masonry to its lateral support with a minimum amount of deformation. It is important to reduce the potential for cracking in masonry due to deflection. There is no specific criteria on connector stiffness, but some authorities suggest that a stiffness of 2,000 lb/in. (350 kN/m) is a reasonable target.
2. Allow differential in-plane movement between two masonry wythes connected with ties. This is especially significant as more insulation is used between the outer and inner wythes of cavity walls and where wythes of dissimilar materials are anchored together. On the surface, it may appear that this criterion is in conflict with Item 1, but it simply means that connectors must be stiff in one direction (out-of-plane) and flexible in the other (in-plane). Note that some connectors allow much more movement than unreinforced masonry can tolerate (see ref. 27 for a discussion of potential masonry wall movements). In order to preserve the in-plane and out-of-plane wall tie stiffness, current codes (refs. 2, 3) allow cavity widths up to $4^1/_2$ in. (114 mm) without performing wall tie analysis. With an engineered analysis of the wall ties, cavity widths may be significantly increased to accommodate thicker insulation.
3. Meet applicable material requirements:
   - plate and bent-bar anchors—ASTM A36 (ref. 4)
   - sheet-metal anchors and ties—ASTM A1008 (ref. 5)
   - wire anchors and ties—ASTM A82 (ref. 6), and adjustable wire ties must also meet the requirements illustrated in Figure 1
   - wire mesh ties – ASTM A185 (ref. 7)
4. Provide adequate corrosion protection. Where carbon steel ties and anchors are specified, corrosion protection must be provided by either galvanizing or epoxy coating in conformance with the following (ref. 8):

   A. Galvanized coatings:
   - Joint reinforcement in interior walls exposed to a mean relative humidity of 75% or less—ASTM A641 (ref. 13), 0.1 oz zinc/ft^2 (0.031 kg zinc/m^2)
   - Joint reinforcement, wire ties and wire anchors, exterior walls or interior walls exposed to a mean relative humidity greater than 75%—ASTM A153 (ref. 14), 1.5 oz zinc/ft^2 (458 g/m^2)
   - Sheet metal ties or anchors, interior walls exposed to a mean relative humidity of 75% or less—ASTM A653 (ref. 15) Coating Designation G60
   - Sheet metal ties or anchors, exterior walls or interior walls exposed to a mean relative humidity greater than 75%—ASTM A153 Class B
   - Steel plates and bars, exterior walls or interior walls exposed to a mean relative humidity greater than 75%—

Related TEK:
3-6B, 5-1B, 10-3, 12-2B, 12-5, 14-8B, 16-1A, 16-2B, 16-4A

Keywords: anchors, cavity walls, column anchorage, connectors, corrosion protection, joint reinforcement, multiwythe walls, veneer, wall ties

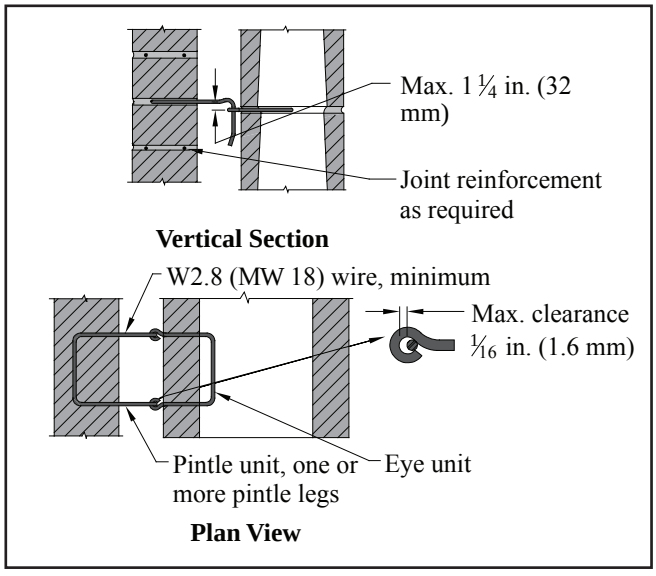

Figure 1—Additional Requirements for Adjustable Ties (ref. 8)

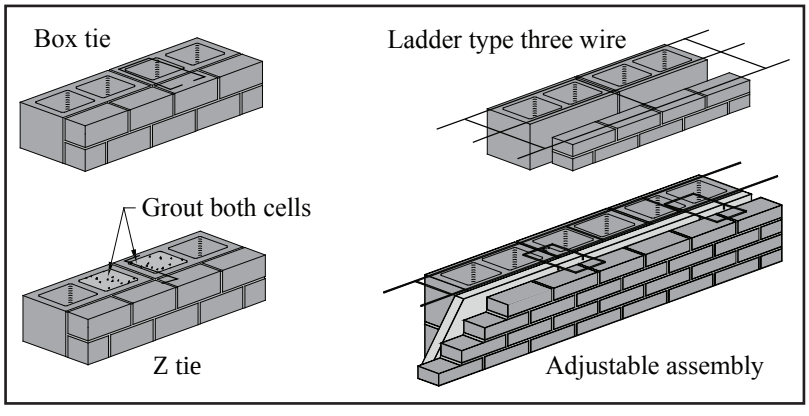

Figure 2—Typical Wall Ties

ASTM A123 (ref. 16) or ASTM A153 Class B

B. Epoxy coatings:

- Joint reinforcement—ASTM A884 (ref. 17) Class A Type 1 ≥ 7 mils (175 µm)
- Wire ties and anchors—ASTM A899 (ref. 18) Class C 20 mils (508 µm)
- Sheet metal ties and anchors—20 mils (508 µm) per surface or per manufacturer's specification

Where stainless steel anchors and ties are specified, *Specification for Masonry Structures* (ref. 8) requires that AISI Type 304 or 316 stainless steel be provided that complies with:

- Joint reinforcement—ASTM A580 (ref. 9)
- Plate and bent-bar anchors—ASTM A480 and ASTM A666 (refs. 10, 11)
- Sheet metal anchors and ties—ASTM A480 and ASTM A240 (refs. 10, 12)
- Wire ties and anchors—ASTM A580

5. Accommodate construction by being simple in design and easy to install. Connectors should not be so large and cumbersome as to leave insufficient room for mortar in the joints, which can result in a greater tendency to allow water migration into the wall. In the same way, connectors should readily accommodate insulation in wall cavities.

WALL TIE AND ANCHOR REQUIREMENTS

Multiwythe Masonry Wall Types

Wall ties are used in all three types of multiwythe walls (composite, noncomposite and veneer), although some requirements vary slightly depending on the application. The primary differences between these wall systems are in construction details and how the applied loads are assumed to be distributed.

Composite walls are designed so that the masonry wythes act together as a single structural member. This requires the masonry wythes to be connected by masonry headers or by a mortar- or grout-filled collar joint and wall ties to help ensure adequate load transfer. TEKs 16-1A and 16-2B (refs. 19, 20) more fully describe composite walls.

In noncomposite masonry (also referred to as a cavity wall), wythes are connected with metal wall ties, but they are designed such that each wythe individually resists the loads imposed on it. Noncomposite walls are discussed in TEKs 16-1A and 16-4A (refs. 19, 21).

In a veneer wall, the backup wythe is designed as the load-resisting system, with the veneer providing the architectural wall finish. Information on veneer walls can be found in TEKs 5-1B and 3-6B (refs. 22, 23). Note that although a cavity wall is defined as a noncomposite masonry wall (ref. 3), the term cavity wall is also commonly used to describe a veneer wall with masonry backup.

Building Code Requirements for Masonry Structures also includes empirical requirements for wire wall ties and strap-type ties used to connect intersecting walls. These requirements are covered in TEK 14-8B (ref. 24).

Wall Ties

Wire wall ties can be either one piece unit ties, adjustable two piece ties, joint reinforcement or prefabricated assemblies made up of joint reinforcement and adjustable ties (see Figure 2). Note that the 2011 edition of *Specification for Masonry Structures* allows adjustable pintle ties to have only one leg (previously, two legs were required for this type of wall tie).

Wall ties do not have to be engineered unless the nominal width of the wall cavity is greater than $4^1/_2$ in. (114 mm). These wall tie analyses are becoming more common as a means to accommodate more thermal insualtion in the wall cavity. Masonry cavities up to 14 in. (356 mm) have been engineered. Of note for these analyses is that the span of wire is a more critical factor than cavity width, i.e. the span length of the pintel component typically controls the mode of failure.

NATIONAL CONCRETE MASONRY ASSOCIATION
Sustainable Concrete Products for Structures and Hardscapes

ASD OF CONCRETE MASONRY LINTELS BASED ON THE 2012 IBC/2011 MSJC

TEK 17-1D
Structural (2011)

INTRODUCTION

Lintels and beams are horizontal structural members designed to carry loads above openings. Although lintels may be constructed of grouted and reinforced concrete masonry units, precast or cast-in-place concrete, or structural steel, this TEK addresses reinforced concrete masonry lintels only. Concrete masonry lintels have the advantages of easily maintaining the bond pattern, color, and surface texture of the surrounding masonry and being placed without need for special lifting equipment.

Concrete masonry lintels are sometimes constructed as a portion of a continuous bond beam. This construction provides several benefits: it is considered to be more advantageous in high seismic areas or areas where high winds may be expected to occur; control of wall movement due to shrinkage or temperature differentials is more easily accomplished; and lintel deflection may be substantially reduced.

The content presented in this TEK is based on the requirements of the 2012 IBC (ref. 1a), which in turn references the 2011 edition of the MSJC Code (ref. 2a). For designs based on the 2006 or 2009 IBC (refs. 1b, 1c), which reference the 2005 and 2008 MSJC (refs. 2b, 2c), respectively, the reader is referred to TEK 17-1C (ref. 3).

Significant changes were made to the allowable stress design (ASD) method between the 2009 and 2012 editions of the IBC. These are described in detail in TEK 14-7C, *Allowable Stress Design of Concrete Masonry Based on the 2012 IBC & 2011 MSJC* (ref. 4), along with a detailed presentation of all of the allowable stress design provisions of the 2012 IBC.

DESIGN LOADS

Vertical loads carried by lintels typically include:

(1) distributed loads from the dead weight of the lintel, the dead weight of the masonry above, and any floor and roof loads, dead and live loads supported by the

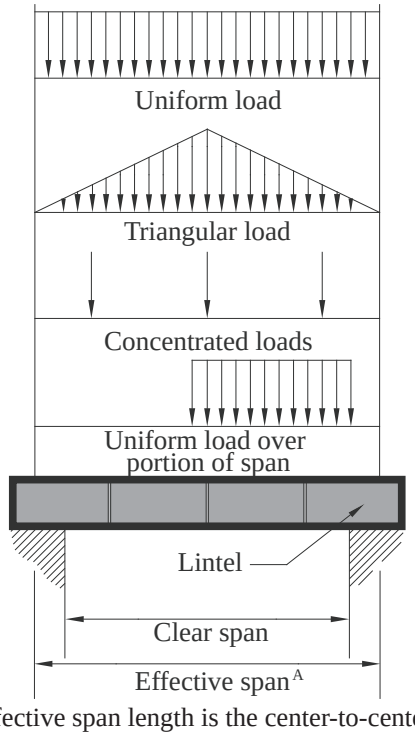

A Effective span length is the center-to-center distance between supports.

Figure 1—Typical Lintel Load Components

Related TEK: 14-7C, 14-13B, 17-1C, 17-2A

Keywords: allowable stress design,arching, design examples, effective span, lintels, openings in walls

masonry; and

(2) concentrated loads from floor beams, roof joists, or other beams framing into the wall. Axial load carried by lintels is negligible.

Most of these loads can be separated into the four types illustrated in Figure 1: uniform load acting over the effective span; triangular load with apex at mid-span acting over the effective span; concentrated load; and uniform load acting over a portion of the effective span.

The designer calculates the effects of each individual load and then combines them using superposition to determine the overall effect, typically by assuming the lintel is a simply supported beam.

Arching Action

For some configurations, the masonry will distribute applied loads in such a manner that they do not act on the lintel. This is called arching action of masonry. Arching action can be assumed when the following conditions are met (see also Figure 2):

- masonry wall laid in running bond,
- sufficient wall height above the lintel to permit formation of a symmetrical triangle with base angles of 45° from the horizontal as shown in Figure 2,
- at least 8 in. (203 mm) of wall height above the apex of the 45° triangle,
- minimum end bearing (4 in. (102 mm) typ.) is maintained,
- control joints are not located adjacent to the lintel, and
- sufficient masonry on each side of the opening to resist lateral thrust from the arching action.

Lintel Loading

The loads supported by a lintel depend on whether or not arching action can occur. When arching is not present, the lintel self-weight, the full weight of the wall section above the lintel and superimposed loads are considered. Self weight is a uniform load based on lintel weight (see Table 1).

When arching occurs, the wall weight supported by the lintel is taken as the wall weight within the triangular area below the apex (see Figure 2 and Table 2). This triangular load has a base equal to the effective span length of the lintel and a height of half the effective span. Any superimposed roof and floor live and dead loads outside this triangle are neglected, since they are assumed to be distributed to the masonry on either side of the lintel. Loads applied within the triangle need to be considered, however.

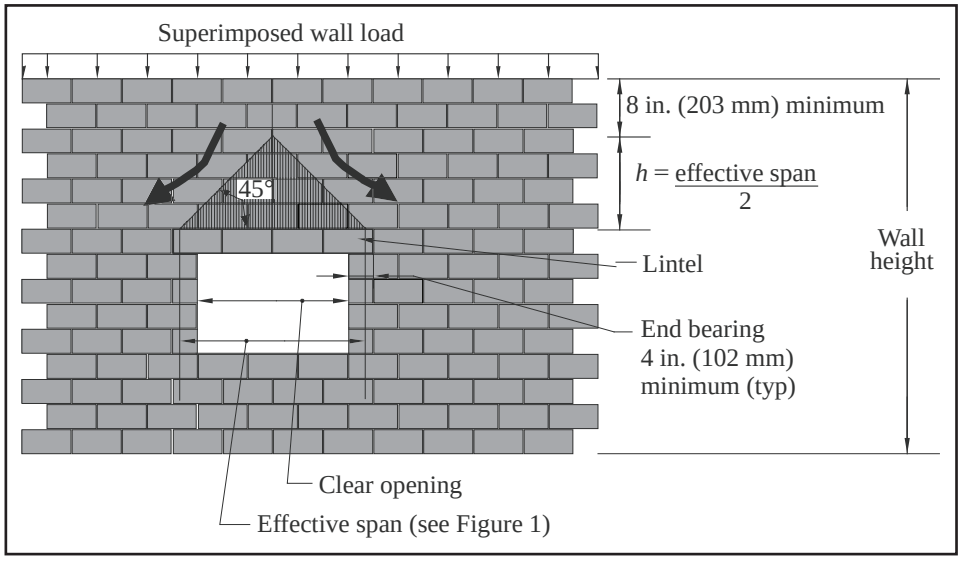

Figure 2—Arching Action

Table 1—Lintel Weights per Foot, D_{lintel}, lb/ft (kN/m)[A]

Nominal lintel height, in. (mm)	Nominal wall thickness, in. (mm)				
	6 (152)	8 (203)	10 (254)	12 (305)	16 (406)
	Lightweight CMU				
8 (203)	38 (0.56)	51 (0.75)	65 (0.95)	80 (1.2)	108 (1.6)
16 (406)	76 (1.1)	103 (1.5)	131 (1.9)	160 (2.3)	216 (3.2)
24 (610)	114 (1.7)	154 (2.3)	196 (2.9)	240 (3.5)	324 (4.8)
	Normal weight CMU				
8 (203)	43 (0.63)	58 (0.84)	73 (1.1)	88 (1.3)	118 (1.8)
16 (406)	86 (1.3)	116 (1.7)	145 (2.1)	176 (2.6)	236 (3.5)
24 (610)	128 (1.9)	174 (2.5)	218 (3.2	264 (3.9)	354 (5.2)

[A] Face shell mortar bedding. Unit weights: grout = 140 pcf (2,242 kg/m^3); lightweight masonry units = 100 pcf (1602 kg/m^3); normal weight units = 135 pcf (2,162 kg/m^3).

Table 2—Wall Weights[A, B]

Grouted cell spacing, in. (mm) o.c.:	Wall weight, lb/ft² (kg/m³) for wall thicknesses, in. (mm), of:									
	Lightweight units					Normal weight units				
	6 (152)	8 (203)	10 (254)	12 (305)	16 (406)	6 (152)	8 (203)	10 (254)	12 (305)	16 (406)
None	23 (112)	29 (142)	34 (166)	37 (181)	44 (215)	30 (147)	39 (191)	45 (220)	49 (239)	58 (283)
48 (1,219)	28 (137)	37 (181)	44 (215)	51 (249)	64 (313)	36 (176)	47 (230)	55 (269)	63 (308)	78 (381)
40 (1,016)	30 (147)	39 (191)	47 (230)	54 (264)	67 (327)	37 (181)	48 (235)	58 (283)	66 (323)	82 (401)
32 (812)	31 (151)	41 (200)	50 (244)	58 (283)	73 (357)	39 (191)	51 (249)	61 (298)	70 (342)	88 (430)
24 (610)	34 (166)	45 (220)	55 (269)	65 (318)	83 (406)	41 (200)	55 (269)	66 (323)	77 (376)	98 (479)
16 (406)	40 (195)	53 (259)	66 (323)	78 (381)	103 (503)	47 (230)	63 (308)	77 (376)	90 (440)	118 (577)
Full grout	57 (279)	77 (376)	98 (479)	120 (587)	163 (796)	64 (313)	86 (420)	109 (533)	132 (645)	177 (865)

[A] Assumes face shell mortar bedding. Unit weights: grout = 140 pcf (2,242 kg/m³); lightweight masonry units = 100 pcf (1,602 kg/m³); normal weight units = 135 pcf (2,162 kg/m³).

[B] Additional wall weights can be found in TEK 14-13B (ref. 5).

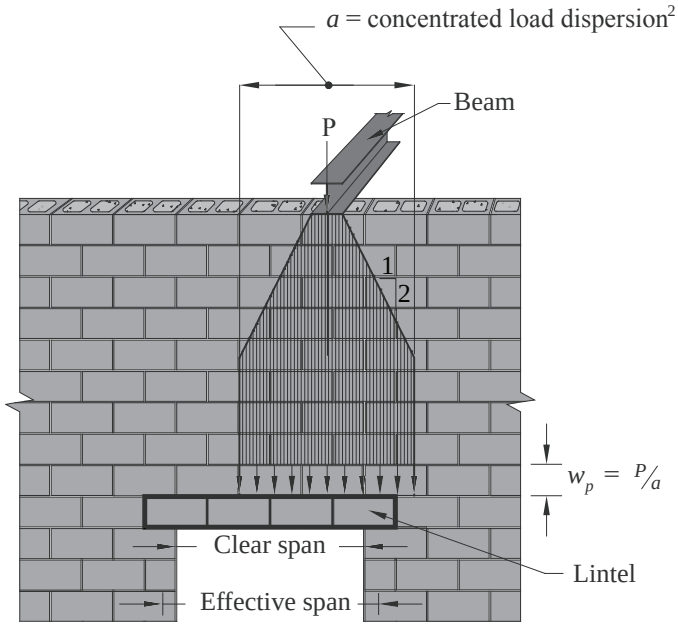

Notes:

1) The 2005 MSJC (ref. 2c) provides for the concentrated load to be distributed at a 45° angle rather than at a 1:2 slope as required by the 2008 and 2011 MSJC (refs. 2a and 2b).
2) For running bond, the concentrated load dispersion terminates at: half the wall height; a movement joint; the end of the wall; or an opening—whichever provides the smallest length. For other than running bond, the concentrated load is permitted to be distributed through the bond beam but not across head joints below the bond beam.

Figure 3—Distribution of Concentrated Load for Running Bond Construction

Concentrated loads are assumed to be distributed as illustrated in Figure 3. The load is then resolved onto the lintel as a uniform load, with a magnitude determined by dividing the concentrated load by this length. In most cases, this results in a uniform load acting over a portion of the lintel span.

The MSJC (ref. 2) does not address how to apply uniform loads that are applied within the 45° triangle. There are two schools of thought (see Figure 4):

1. Apply the full uniform load directly to the lintel without further distribution just as though there was no arching for those loads (ref. 7).
2. Distribute the portions of uniform loads that are applied within the 45° triangle to the lintel. These uniform loads within the 45° triangle may be dispersed and distributed at a 45° angle onto the lintel (ref. 6).

Lintels are required to be designed to have adequate stiffness to limit deflections that would adversely affect strength or serviceability. In addition, the deflection of lintels supporting unreinforced masonry is limited to the clear lintel span divided by 600 to limit damage to the supported masonry (ref. 2).

DESIGN TABLES

Tables 3 and 4 present allowable shear and moment, respectively, for various concrete masonry lintels, with various amounts of reinforcement and bottom cover based on a specified compressive strength of masonry, f'_m = 1,500 psi (10.3 MPa) and the allowable stress design provisions of the 2011 MSJC (ref. 2a) and the 2012 IBC (ref.1a). Allowable shear and moment tables for f'_m = 2,000 psi (13.8 MPa) and f'_m = 2,500 psi (17.2 MPa) can be found online at www.ncma.org/teksupplements.

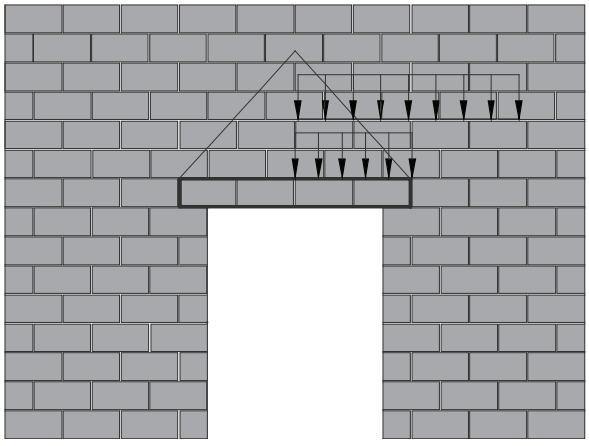

Design philosophy 1: Apply the load directly to the lintel as though there was no arching action (ref. 7).

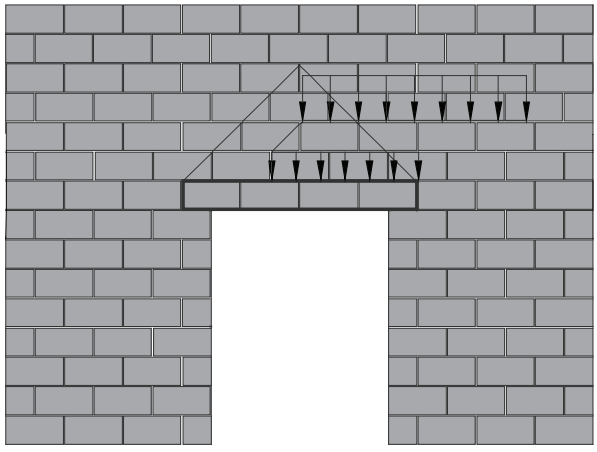

Design philosophy 2: Distribute the portion of load applied within the 45° triangle to the lintel at a 45° angle onto the lintel (ref. 6).

Figure 4—Methods of Applying Uniform Loads that Occur Within the 45° Triangle

Table 3—Allowable Shear Capacities for Concrete Masonry Lintels[A]

Lintel size, in. (mm) (width x height):	Allowable shear[B, C], lb (kN), for bottom cover, in. (mm):			
	1.5 (38)	2.0 (51)	2.5 (64)	3.0 (76)
6 x 8 (152 x 203)	919 (4.09)	796 (3.54)	673 (2.99)	551 (2.45)
6 x 16 (152 x 406)	3,369 (14.99)	3,247 (14.44)	3,124 (13.90)	3,002 (13.35)
6 x 24 (152 x 610)	5,330 (23.71)	5,208 (23.17)	5,085 (22.62)	4,963 (22.08)
8 x 8 (203 x 203)	1,910 (8.50)	1,744 (7.76)	1,578 (7.02)	1,411 (6.28)
8 x 16 (203 x 406)	4,568 (20.32)	4,402 (19.58)	4,235 (18.84)	4,069 (18.10)
8 x 24 (203 x 610)	7,225 (32.14)	7,059 (31.40)	6,893 (30.66)	6,727 (29.92)
10 x 8 (254 x 203)	2,411 (10.72)	2,201 (9.79)	1,992 (8.86)	1,782 (7.93)
10 x 16 (254 x 406)	5,766 (25.65)	5,556 (24.71)	5,346 (23.78)	5,137 (22.85)
10 x 24 (254 x 610)	9,121 (40.57)	8,911 (39.64)	8,701 (38.70)	8,492 (37.77)
12 x 8 (305 x 203)	2,912 (12.95)	2,659 (11.83)	2,405 (10.70)	2,152 (9.57)
12 x 16 (305 x 406)	6,964 (30.98)	6,711 (29.85)	6,458 (28.73)	6,204 (27.60)
12 x 24 (305 x 610)	11,016 (49.00)	10,763 (47.88)	10,510 (46.75)	10,256 (45.62)
16 x 8 (406 x 203)	3,914 (17.41)	3,574 (15.90)	3,233 (14.38)	2,893 (12.87)
16 x 16 (406 x 406)	9,360 (41.64)	9,020 (40.12)	8,680 (38.61)	8,339 (37.09)

[A] Assumes no stirrups, i.e., shear resistance of the steel is neglected. f'_m = 1,500 psi (10.3 MPa).
[B] For M/Vd = 1 and effective shear area = bd, where d is calculated based on a No. 6 (M#19) bar.
[C] Based on 2011 MSJC (ref. 2a) and 2012 IBC (ref. 1a) allowable stress design procedure.

Table 4—Allowable Moment, lb-in. (kN-m), Capacities for Concrete Masonry Lintels (width x height)[A, C]

Lintel size, in. (mm)	Reinforcement size	No. of bars	Bottom cover, in. (mm) 1.5 (38)		2 (51)		2.5 (64)		3 (76)	
6 x 8 (152 x 203)	No. 4 (M#13)	1	22,533	(2.55)	19,398	(2.19)	16,445	(1.86)	13,683	(1.55)
	No. 5 (M#16)	1	25,258	(2.85)	21,638	(2.44)	18,241	(2.06)	15,076	(1.70)
	No. 6 (M#19)	1	27,235	(3.08)	23,225	(2.62)	19,475	(2.20)	15,997	(1.81)
6 x 16 (152 x 406)	No. 4 (M#13)	1	80,473	(9.09)	77,449	(8.75)	74,429	(8.41)	71,411	(8.07)
	No. 5 (M#16)	1	108,375	(12.24)	101,967	(11.52)	95,705	(10.81)	89,592	(10.12)
	No. 6 (M#19)	1	120,999	(13.67)	113,709	(12.85)	106,591	(12.04)	99,649	(11.26)
6 x 24 (152 x 610)	No. 4 (M#13)	1	129,190	(14.60)	126,130	(14.25)	123,072	(13.91)	120,016	(13.56)
	No. 5 (M#16)	1	196,210	(22.17)	191,521	(21.64)	186,834	(21.11)	182,151	(20.58)
	No. 6 (M#19)	1	259,090	(29.27)	249,360	(28.17)	239,768	(27.09)	230,316	(26.02)
8 x 8 (203 x 203)	No. 4 (M#13)	1	27,627	(3.12)	23,829	(2.69)	20,246	(2.29)	16,888	(1.91)
	No. 5 (M#16)	1	31,288	(3.54)	26,863	(3.04)	22,702	(2.56)	18,816	(2.13)
	No. 6 (M#19)	1	34,046	(3.85)	29,103	(3.29)	24,469	(2.76)	20,159	(2.28)
	No. 4 (M#13)	2[B]	34,383	(3.88)	29,519	(3.34)	24,949	(2.82)	20,687	(2.34)
	No. 5 (M#16)	2[B]	37,992	(4.29)	32,449	(3.67)	27,263	(3.08)	22,448	(2.54)
8 x 16 (203 x 406)	No. 4 (M#13)	1	81,481	(9.21)	78,433	(8.86)	75,387	(8.52)	72,345	(8.17)
	No. 5 (M#16)	1	123,411	(13.94)	118,743	(13.42)	114,080	(12.89)	109,164	(12.33)
	No. 6 (M#19)	1	148,153	(16.74)	139,337	(15.74)	130,723	(14.77)	122,316	(13.82)
	No. 4 (M#13)	2[B]	145,474	(16.44)	136,929	(15.47)	128,576	(14.53)	120,420	(13.61)
	No. 5 (M#16)	2[B]	167,351	(18.91)	157,298	(17.77)	147,484	(16.66)	137,911	(15.58)
8 x 24 (203 x 610)	No. 4 (M#13)	1	130,542	(14.75)	127,463	(14.40)	124,385	(14.05)	121,309	(13.71)
	No. 5 (M#16)	1	198,654	(22.44)	193,927	(21.91)	189,202	(21.38)	184,481	(20.84)
	No. 6 (M#19)	1	277,106	(31.31)	270,459	(30.56)	263,816	(29.81)	257,178	(29.06)
	No. 4 (M#13)	2[B]	254,466	(28.75)	248,406	(28.07)	242,350	(27.38)	236,297	(26.70)
	No. 5 (M#16)	2[B]	357,742	(40.42)	344,327	(38.90)	331,103	(37.41)	318,071	(35.94)
10 x 8 (254 x 203)	No. 4 (M#13)	1	32,155	(3.63)	27,773	(3.14)	23,634	(2.67)	19,748	(2.23)
	No. 5 (M#16)	1	36,683	(4.14)	31,545	(3.56)	26,706	(3.02)	22,180	(2.51)
	No. 6 (M#19)	1	40,181	(4.54)	34,406	(3.89)	28,985	(3.27)	23,933	(2.70)
	No. 4 (M#13)	2	40,489	(4.57)	34,819	(3.93)	29,484	(3.33)	24,498	(2.77)
	No. 5 (M#16)	2	45,131	(5.10)	38,617	(4.36)	32,511	(3.67)	26,831	(3.03)
10 x 16 (254 x 406)	No. 4 (M#13)	1	82,183	(9.29)	79,119	(8.94)	76,057	(8.59)	72,997	(8.25)
	No. 5 (M#16)	1	124,671	(14.09)	119,972	(13.56)	115,278	(13.02)	110,588	(12.49)
	No. 6 (M#19)	1	172,276	(19.46)	162,114	(18.32)	152,181	(17.19)	142,481	(16.10)
	No. 4 (M#13)	2	159,833	(18.06)	153,813	(17.38)	147,800	(16.70)	140,049	(15.82)
	No. 5 (M#16)	2	195,635	(22.10)	183,997	(20.79)	172,627	(19.50)	161,532	(18.25)

Table 4—Allowable Moment, lb-in. (kN-m), Capacities for Concrete Masonry Lintels (width x height)[A, C] (continued)

Lintel size, in. (mm)	Reinforcement size	No. of bars	Bottom cover, in. (mm) 1.5 (38)		2 (51)		2.5 (64)		3 (76)	
10 x 24 (254 x 610)	No. 4 (M#13)	1	131,476	(14.85)	128,384	(14.51)	125,293	(14.16)	122,204	(13.81)
	No. 5 (M#16)	1	200,357	(22.64)	195,605	(22.10)	190,855	(21.56)	186,108	(21.03)
	No. 6 (M#19)	1	279,829	(31.62)	273,140	(30.86)	266,454	(30.11)	259,773	(29.35)
	No. 4 (M#13)	2	256,873	(29.02)	250,776	(28.33)	244,683	(27.65)	238,594	(26.96)
	No. 5 (M#16)	2	389,720	(44.03)	380,383	(42.98)	371,052	(41.92)	361,729	(40.87)
12 x 8 (305 x 203)	No. 4 (M#13)	1	33,873	(3.83)	30,863	(3.49)	26,719	(3.02)	22,356	(2.53)
	No. 5 (M#16)	1	41,611	(4.70)	35,826	(4.05)	30,372	(3.43)	25,264	(2.85)
	No. 6 (M#19)	1	45,809	(5.18)	39,279	(4.44)	33,140	(3.74)	27,411	(3.10)
	No. 4 (M#13)	2	46,082	(5.21)	39,680	(4.48)	33,648	(3.80)	28,004	(3.16)
	No. 5 (M#16)	2	51,714	(5.84)	44,313	(5.01)	37,366	(4.22)	30,894	(3.49)
12 x 16 (305 x 406)	No. 4 (M#13)	1	82,711	(9.35)	79,634	(9.00)	76,560	(8.65)	73,488	(8.30)
	No. 5 (M#16)	1	125,624	(14.19)	120,902	(13.66)	116,184	(13.13)	111,471	(12.59)
	No. 6 (M#19)	1	174,897	(19.76)	168,258	(19.01)	161,627	(18.26)	155,004	(17.51)
	No. 4 (M#13)	2	161,174	(18.21)	155,121	(17.53)	149,074	(16.84)	143,034	(16.16)
	No. 5 (M#16)	2	221,425	(25.02)	208,349	(23.54)	195,570	(22.10)	183,095	(20.69)
12 x 24 (305 x 610)	No. 4 (M#13)	1	132,174	(14.93)	129,072	(14.58)	125,971	(14.23)	122,872	(13.88)
	No. 5 (M#16)	1	201,635	(22.78)	196,865	(22.24)	192,096	(21.70)	187,330	(21.17)
	No. 6 (M#19)	1	281,884	(31.85)	275,164	(31.09)	268,447	(30.33)	261,734	(29.57)
	No. 4 (M#13)	2	258,686	(29.23)	252,563	(28.54)	246,442	(27.84)	240,325	(27.15)
	No. 5 (M#16)	2	392,972	(44.40)	383,584	(43.34)	374,202	(42.28)	364,827	(41.22)
16 x 8 (406 x 203)	No. 4 (M#13)	1	34,307	(3.88)	31,272	(3.53)	28,244	(3.19)	25,225	(2.85)
	No. 5 (M#16)	1	50,450	(5.70)	43,512	(4.92)	36,961	(4.18)	30,816	(3.48)
	No. 6 (M#19)	1	55,949	(6.32)	48,069	(5.43)	40,647	(4.59)	33,706	(3.81)
	No. 4 (M#13)	2	56,145	(6.34)	48,435	(5.47)	41,159	(4.65)	34,338	(3.88)
	No. 5 (M#16)	2	63,635	(7.19)	54,645	(6.17)	46,189	(5.22)	38,292	(4.33)
16 x 16 (406 x 406)	No. 4 (M#13)	1	83,464	(9.43)	80,371	(9.08)	77,279	(8.73)	74,190	(8.38)
	No. 5 (M#16)	1	126,996	(14.35)	122,241	(13.81)	117,491	(13.27)	112,744	(12.74)
	No. 6 (M#19)	1	177,087	(20.01)	170,394	(19.25)	163,708	(18.50)	157,029	(17.74)
	No. 4 (M#13)	2	163,114	(18.43)	157,014	(17.74)	150,920	(17.05)	144,831	(16.36)
	No. 5 (M#16)	2	247,094	(27.92)	237,751	(26.86)	228,419	(25.81)	219,098	(24.75)

[A] Grade 60 reinforcement. f'_m = 1,500 psi (10.3 MPa).
[B] For 8 in. (204 mm) lintels with two bars, low lift grouting is recommended for adjacent jambs to ensure proper grout flow and consolidation.
[C] Based on 2011 MSJC (ref. 2a) and 2012 IBC (ref. 1a) allowable stress design procedure.

DESIGN EXAMPLE

Design a lintel for a 12 in. (305 mm) normal weight concrete masonry wall laid in running bond with vertical reinforcement at 48 in. (1.2 m) o.c. The wall configuration is shown in Figure 5.

Case 1—Arching Action

Check for Arching Action. Determine the height of masonry required for arching action. Assuming the lintel has at least 4 in. (102 mm) bearing on each end, the effective span is: $L = 5.33 + 0.33 = 5.67$ ft (1.7 m).

The height of masonry above the lintel necessary for arching to occur in the wall (from Figure 2) is h + 8 in. (203 mm) = $L/2$ + 8 in. = 3.5 ft (1.1 m).

Based on an 8-in. (203-mm) high lintel, there is 18.0 - (3.33 + 4.0 + 0.67) = 10.0 ft (3.0 m) of masonry above the lintel. Therefore, arching is assumed and the superimposed uniform load is neglected.

Design Loads. Because arching occurs, only the lintel and wall dead weights are considered. Lintel weight, from Table 1, for 12 in. (305 mm) normal weight concrete masonry units assuming an 8 in. (203 mm) height is D_{lintel} = 88 lb/ft (1.3 kN/m).

For wall weight, only the triangular portion with a height of 3.5 ft (1.1 m) is considered. From Table 2, wall dead load is:

D_{wall} = 63 lb/ft^2 (3.5 ft)
= 221 lb/ft (3.2 kN/m) at the apex.

Maximum moment and shear are determined using simply supported beam relationships. The lintel dead weight is considered a uniform load, so the moment and shear are,

$M_{lintel} = D_{lintel} L^2/8$
$= (88)(5.7)^2/8$
= 357 lb-ft (0.48 kN-m)

$V_{lintel} = D_{lintel} L/2$
$= (88)(5.7)/2$ = 251 lb (1.1 kN)

For triangular wall load, moment and shear are,

$M_{wall} = D_{wall} L^2/12$
$= (221)(5.7)^2/12$
= 598 lb-ft (0.81 kN-m)

$V_{wall} = D_{wall} L/4$
$= (221)(5.7)/4$ = 315 lb (1.4 kN)

Because the maximum moments for the two loading conditions occur in the same locations on the lintel (as well as the maximum shears), the moments and shears are superimposed and summed:

M_{max} = 357 + 598
= 955 lb-ft = 11,460 lb-in (1.3 kN-m)

V_{max} = 251 + 315
= 566 lb (2.5 kN)

Lintel Design. From Tables 3 and 4, a 12 x 8 lintel with one No. 4 (M#13) bar and 3 in. (76 mm) or less bottom cover has adequate strength (M_{all} = 22,356 lb-in. (2.53 kN-m) and V_{all} = 2,152 lb (9.57 kN)). In this example, shear was conservatively computed at the end of the lintel. However, *Building Code Requirements for Masonry Structures* (ref. 2) allows maximum shear to be calculated using a distance $d/2$ from the face of the support.

Case 2—No Arching Action

Using the same example, recalculate assuming a 2 ft (0.6 m) height from the bottom of the lintel to the top of the wall. For ease of construction, the entire 2 ft (0.6 m) would be grouted solid, producing a 24 in. (610 mm) deep lintel.

Because the height of masonry above the lintel is less than 3.5 ft (1.1 m), arching cannot be assumed, and the superimposed load must be accounted for.

D_{lintel} = 264 lb/ft (3.9 kN/m), from Table 1. Because the lintel is 24 in. (610 mm) deep, there is no additional dead load due to masonry above the lintel.

W_{total} = 264 lb/ft + 1,000 lb/ft
= 1,264 lb/ft (18.4 kN/m)

$M_{max} = wL^2/8$
$= (1{,}264)(5.7)^2/8$ x 12 in./ft
= 61,601 lb-in (7.0 kN-m)

$V_{max} = wL/2 = (1{,}264)(5.7)/2$
= 3,602 lb (16.0 kN)

From Tables 3 and 4, a 12 x 24 lintel with one No. 4 (M#13) reinforcing bar and 3 in. (76 mm) or less bottom cover is adequate (M_{all} = 122,872 lb-in. (13.88 kN-m) and V_{all} = 10,256 lb (45.62 kN).

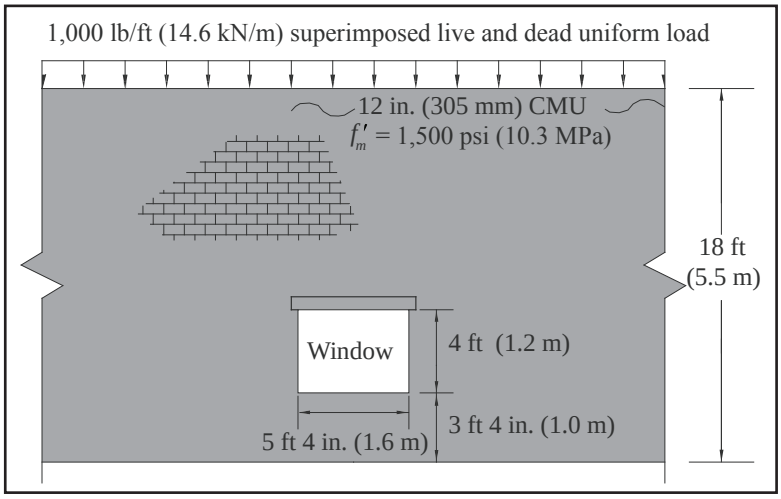

Figure 5—Wall Configuration for Design Example

NOTATIONS

b = width of lintel, in. (mm)
D_{lintel} = lintel dead load, lb/ft (kN/m)
D_{wall} = wall dead load, lb/ft (kN/m)
d = distance from extreme compression fiber to centroid of tension reinforcement, in. (mm)
f'_m = specified compressive strength of masonry, psi (MPa)
h = half of the effective lintel span, L/2, ft (m)
L = effective lintel span, ft (m)
M_{all} = allowable moment, in.-lb (N·m)
M_{lintel} = maximum moment due to lintel dead load, in.-lb (N·m)
M_{max} = maximum moment, in.-lb (N·m)
M_{wall} = maximum moment due to wall dead load moment, in.-lb (N·m)
V_{all} = allowable shear, lb (N)
V_{lintel} = maximum shear due to lintel dead load, lb (N)
V_{max} = maximum shear, lb (N)
V_{wall} = maximum shear due to wall dead load, lb (N)
W_{total} = total uniform live and dead load, lb/ft (kN/m)
w = uniformly distributed load, lb/in. (N/mm)

REFERENCES

1. *International Building Code.* International Code Council.
   a. 2012 Edition
   b. 2009 Edition
   c. 2006 Edition
2. *Building Code Requirements for Masonry Structures*. Reported by the Masonry Standards Joint Committee.
   a. 2011 Edition: TMS 402-11/ACI 530-11/ASCE 5-11
   b. 2008 Edition: TMS 402-08 /ACI 530-08/ASCE 5-08
   c. 2005 Edition: ACI 530-05/ASCE 5-05/TMS 402-05
3. *Allowable Stress Design of Concrete Masonry Lintels*, TEK 17-1C. National Concrete Masonry Association, 2009.
4. *Allowable Stress Design of Concrete Masonry Based on the 2012 IBC & 2011 MSJC*, TEK 14-7C. National Concrete Masonry Association, 2011.
5. *Concrete Masonry Wall Weights*, TEK 14-13B. National Concrete Masonry Association, 2008.
6. *Openings in Concrete Masonry Walls (Part 1)*, Masonry Chronicles Winter 2008-09. Concrete Masonry Association of California and Nevada, 2009.
7. *Lintel Design Manual*, TR91B. National Concrete Masonry Association, 2004.

NCMA and the companies disseminating this technical information disclaim any and all responsibility and liability for the accuracy and the application of the information contained in this publication.

NATIONAL CONCRETE MASONRY ASSOCIATION
Sustainable Concrete Products for Structures and Hardscapes

NATIONAL CONCRETE MASONRY ASSOCIATION
13750 Sunrise Valley Drive, Herndon, Virginia 20171
www.ncma.org

To order a complete TEK Manual or TEK Index, contact NCMA Publications (703) 713-1900

The prescribed size and spacing is presumed to provide connections that will be adequate for the loading conditions covered by the code. These wall tie spacing requirements can be found in TEK 3-6B (for veneers) and TEK 16-1A (for composite and noncomposite walls).

Note that truss-type joint reinforcement is stiffer in the plane of a wall compared to ladder-type, so it is more restrictive of differential movement. For this reason, ladder-type joint reinforcement is recommended when significant differential movement is expected between the two wythes or when vertical reinforcement is used. See TEK 12-2B (ref. 25) for more information.

Anchors

Building Code Requirements for Masonry Structures (ref. 3) does not contain prescriptive requirements for wall anchors, but does imply that they be designed with a structural system to resist wind and earthquake loads and to accommodate the effects of deformation. Typical anchors are shown in Figure 3. The shapes and sizes of these typical anchors have evolved over many years and satisfy the "constructability" criterion. All of the anchors shown have been tested with the resulting capacities shown in Table 1.

Additional tests are needed for adjustable anchors of different configurations and for one piece anchors. Proprietary anchors are also available. Manufacturers of proprietary anchors should furnish test data to document comparability with industry-tested anchors.

Anchors are usually designed based on their contributory area. This is the traditional approach, but some computer models suggest that this approach does not always reflect the actual behavior of the anchorage system. However, there is currently no accepted computer program to address this point, so most designers still use the contributory area approach with a factor of safety of three. The use of additional anchors near the edges of wall panels is also recommended and required around large openings and within 12 in. (305 mm) of unsupported edges.

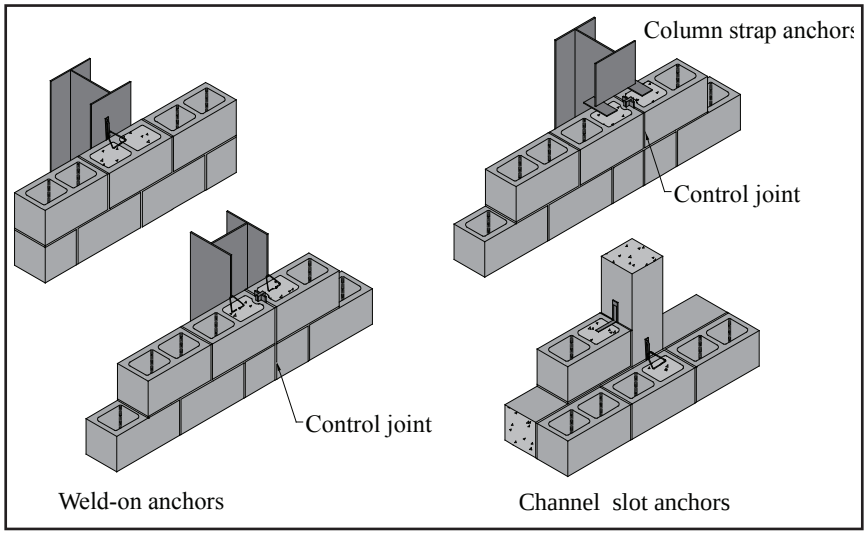

Figure 3—Typical Column Anchors

Table 1—Anchor Capacities (ref. 26)

Anchor Description:	Characteristic:	Tension:	Compression: Cavity 1, 1 in. (25 mm):	Compression: Cavity 2, width varies, see Description:	Shear:
Column flange (2 pieces), Cavity 2 = 4 in. (102 mm)	Avg. load, lb (kN)	3,342 (14.9)	9,863 (43.9)	6,373 (28.3)	1,584 (7.05)
	Standard deviation	324	1,041	1,773	438
	Avg. stiffness, lb/in. (kN/m)	96,063 (16,823)	191,595 (33,553)	123,452 (21,620)	25,094 (4,395)
	Standard deviation	39,548	116,649	86,066	14,114
Weld-on triangle, Cavity 2 = 2 in. (51 mm)	Avg. load, lb (kN)	816 (3.63)	1,159 (5.16)	702 (3.12)	
	Standard deviation	76	332	153	
	Avg. stiffness, lb/in. (kN/m)	5,379 (942)	29,944 (5,244)	22,268 (3,900)	
	Standard deviation	2,428	14,700	8,332	
Dovetail triangle, Cavity 2 = 3 in. (76 mm)	Avg. load, lb (kN)	714 (3.18)	560 (2.49)	386 (1.72)	347 (1.54)
	Standard deviation	76	95	75	15
	Avg. stiffness, lb/in. (kN/m)	11,667 (2,043)	7,526 (1,318)	6,857 (1,201)	3,844 (673)
	Standard deviation	8,755	2,451	2,630	1,764
Channel slot, Cavity 2 = 4 in. (102 mm)	Avg. load, lb (kN)	832 (3.70)	271(1.21)	310 (1.38)	
	Standard deviation	208	102	213	
	Avg. stiffness, lb/in. (kN/m)	5,207 (912)	9,494 (1,663)	5,125 (897)	
	Standard deviation	2,978	5,992	2,117	

CONSTRUCTION

When typical ties and anchors are properly embedded in mortar or grout, mortar pullout or pushout will not usually be the controlling mode of failure. *Specification for Masonry Structures* requires that connectors be embedded at least $1^1/_2$ in. (38 mm) into a mortar bed of solid units. The required embedment of unit ties in hollow masonry is such that the tie must extend completely across the hollow units. Proper embedment can be easily attained with the use of prefabricated assemblies of joint reinforcement and unit ties. Because of the magnitude of loads on anchors, it is recommended that they be embedded in filled cores of hollow units. See TEK 3-6B for more detailed information.

REFERENCES

1. *Fasteners for Concrete Masonry*, TEK 12-5. National Concrete Masonry Association, 2005.
2. *International Building Code*. International Code Council, 2012.
3. *Building Code Requirements for Masonry Structures*, TMS 402-11/ACI 530-11/ASCE 5-11. Reported by the Masonry Standards Joint Committee, 2011.
4. *Standard Specification for Carbon Structural Steel,* A36-08. ASTM International, 2008.
5. *Standard Specification for Steel, Sheet, Cold-Rolled, Carbon, Structural, High-Strength Low-Alloy with Improved Formability,* A1008-11. ASTM International, 2011.
6. *Standard Specification for Steel Wire, Plain for Concrete Reinforcement,* A82-07. ASTM International, 2007.
7. *Standard Specification for Steel Welded Wire Reinforcement, Plain, for Concrete,* A185-07. ASTM International, 2007.
8. *Specification for Masonry Structures*, TMS 602 -11/ACI 530.1-11/ASCE 6-11. Reported by the Masonry Standards Joint Committee, 2011.
9. *Standard Specification for Stainless Steel Wire*, ASTM A580-08. ASTM International, 2008.
10. *Standard Specification for General Requirements for Flat-Rolled Stainless and Heat-Resisting Steel Plate, Sheet, and Strip*, ASTM A480-11a. ASTM International, 2011.
11. *Standard Specification for Annealed or Cold-Worked Austenitic Stainless Steel, Sheet, Strip, Plate and Flat Bar*, ASTM A666-10. ASTM International, 2010.
12. *Standard Specification for Chromium and Chromium-Nickel Stainless Steel Plate, Sheet and Strip for Pressure Vessels and for General Applications,* ASTM A240-11a. ASTM International, 2011.
13. *Standard Specification for Zinc-Coated (Galvanized) Carbon Steel Wir*e, ASTM A641-09a. ASTM International, 2009.
14. *Standard Specification for Zinc Coating (Hot-Dip) on Iron and Steel Hardware*, ASTM A153-09. ASTM International, 2009.
15. *Standard Specification for Steel Sheet, Zinc-Coated Galvanized or Zinc-Iron Alloy-Coated Galvannealed by the Hot-Dip Process,* ASTM A653-10. ASTM International, 2010.
16. *Standard Specification for Zinc (Hot-Dip Galvanized) Coating on Iron and Steel Products*, ASTM A123-09. ASTM International, 2009.
17. *Standard Specification for Epoxy-Coated Steel Wire and Welded Wire Fabric for Reinforcemen*t, ASTM A884-06. ASTM International, 2006.
18. *Standard Specification for Steel Wire Epoxy Coated*, ASTM A899-91(2007). ASTM International, 2007.
19. *Multiwythe Concrete Masonry Walls,* TEK 16-1A. National Concrete Masonry Association, 2005.
20. *Structural Design of Unreinforced Composite Masonry,* TEK 16-2B. National Concrete Masonry Association, 2002.
21. *Design of Concrete Masonry Noncomposite (Cavity) Walls,* TEK 16-4A. National Concrete Masonry Association, 2004.
22. *Concrete Masonry Veneer Details,* TEK 5-1B. National Concrete Masonry Association, 2003.
23. *Concrete Masonry Veneers,* TEK 3-6B. National Concrete Masonry Association, 2005.
24. *Empirical Design of Concrete Masonry Walls,* TEK 14-8B. National Concrete Masonry Association, 2008.
25. *Joint Reinforcement for Concrete Masonry,* TEK 12-2B. National Concrete Masonry Association, 2005.
26. Porter, Max L., Lehr, Bradley R., Barnes, Bruce A., *Attachments for Masonry Structures*, Engineering Research Institute, Iowa State University, February 1992.
27. *Control Joints for Concrete Masonry Walls—Alternative Engineered Method*, TEK 10-3. National Concrete Masonry Association, 2003.

NCMA and the companies disseminating this technical information disclaim any and all responsibility and liability for the accuracy and the application of the information contained in this publication.

NATIONAL CONCRETE MASONRY ASSOCIATION
Sustainable Concrete Products for Structures and Hardscapes

NATIONAL CONCRETE MASONRY ASSOCIATION
13750 Sunrise Valley Drive, Herndon, Virginia 20171
www.ncma.org

To order a complete TEK Manual or TEK Index, contact NCMA Publications (703) 713-1900

Safety Awards Program

OVERVIEW

This program recognizes safety-conscious Producer and Associate Members of the National Concrete Masonry Association (NCMA) and the Interlocking Concrete Pavement Institute (ICPI), as evidenced by exemplary safety records.

The awards will be presented during the 2012 International Concrete Exposition (ICON EXPO). Award recipients will also be recognized in *Concrete Masonry Designs* and in other trade publications. Participation in the awards presentation is not a requirement to receive an award.

PROGRAM REQUIREMENTS

The NCMA / ICPI Safety Awards Program is open to all production or manufacturing facilities of Producer or Associate Members of NCMA or ICPI in good standing during the reporting period. Each facility enters individually; **there is a discount for multiple-facility entries from the same company**. Eligibility is limited to facilities with production or manufacturing personnel on their Occupational Safety and Health Administration (OSHA) 300 logs or equivalent Canadian injury reports.

The awards are for the reporting period of January 1, 2011 through December 31, 2011. All facilities with fatalities recorded during the period covered by the program are automatically disqualified from receiving any safety awards for the period covered by the program.

To enter, complete and submit a copy of the facility's **OSHA 300 log or equivalent Canadian injury report**, covering the entire reporting period, with the **Safety Awards Program Entry Form** and **entry fee**, **by January 20, 2012**. Submit one entry form per facility. Submitted figures must represent all employees at each plant or location for which a separate OSHA log or equivalent Canadian injury report is kept.

Winning entrants will be asked to provide a high-resolution (300 dpi or better), digital photo of their facility (production line, production team, or facility) by the end of January; **please take photos in advance**.

ENTRY FEE

There is a **base fee of US$295 for the first facility entry** from each company, with a **discounted fee of US$150 for each additional facility entry** from the same company. The base fee includes entry for one (1) to the awards banquet. Each Producer or Associate member may enter multiple facilities (one facility per form). Companies entering multiple winning facilities will receive a company plaque; each winning facility will also receive its own plaque. If an award recipient is unable to attend the awards ceremony, that recipient's award will be mailed, at no additional charge, to the address provided on the entry form.

SAFETY AWARDS CATEGORIES

MILESTONE AWARD

This highly coveted award shall be bestowed only upon those NCMA Producer or Associate member facilities or ICPI Producer or Associate member facilities with five, eight, or ten consecutive years of Safety Awards Program entries with zero OSHA (or equivalent Canadian injury report) recordable injuries.

PLATINUM SAFETY AWARD

This prestigious award, the highest level of safety achievement in a single year, is given to any (and all) NCMA Producer or Associate member facilities or ICPI Producer or Associate member facilities with zero OSHA (or equivalent Canadian injury report) recordable injuries during the award reporting period.

GOLD AND SILVER SAFETY AWARDS

All remaining NCMA Producer, NCMA Associate, ICPI Producer, and ICPI Associate entries are eligible for this second-tier award based on the work categories described below. In the event of an incidence-rate tie, all tied entries will receive an award.

The **PRODUCER GOLD SAFETY AWARD** will be given to the NCMA or ICPI Producer member facility—and the **ASSOCIATE GOLD SAFETY AWARD** will be given to the NCMA or ICPI Associate member facility—with the best, non-zero recordable-injury incidence rate in each category.*

The **PRODUCER SILVER SAFETY AWARD** will be given to the NCMA or ICPI Producer member facility—and the **ASSOCIATE SILVER SAFETY AWARD** will be given to the NCMA or ICPI Associate member facility—with the second-best, non-zero recordable-injury incidence rate in each category.*

* Excellence in Safety Awards are categorized by total number of hours worked at a facility, as follows:

Category I	0 - 40,000 hours
Category II	40,001 - 80,000 hours
Category III	80,001 - 140,000 hours
Category IV	140,001 - 200,000 hours
Category V	200,001+ hours

The recordable-injury incidence rate (RIR) is based on the number of OSHA 300 log (or equivalent Canadian injury report) recordable injuries for each facility during the reporting period, compared to the number of hours worked. This incidence-rate formula will be used to express all entries as the number of recordable cases per 100 employees:

$$(\mathbf{RIR}) = \frac{\textbf{(\# of Recordable Injuries) x (200,000)}}{\textbf{(Total \# of hours worked)**}}$$

** "Total # of hours worked" during the reporting period is for all personnel, for the facility being reported on this form.

Safety Awards Program

2011 Entry Form

INSTRUCTIONS

This Entry Form, the entry fee, and a copy of the entrant facility's OSHA 300 log or equivalent Canadian injury report (without employee names) **must be received at NCMA Headquarters no later than January 20, 2012**; this is a receipt deadline, not a postmark deadline. ***Please complete a separate form for each location where a separate OSHA log or equivalent Canadian injury report is maintained***. To take advantage of the multiple-facility discount, **complete the payment information on only one entry form per company**. NCMA or ICPI will contact the safety representative listed on the Entry Form to confirm any award received.

Total hours worked during the reporting period, for all personnel, for the facility being reported on this form: _____

Total number of recordable injuries and illnesses. Total of OSHA 300 columns G-J (or Canadian equivalent): _____

Name of Company: _____

Name of Facility: _____

Facility Street Address: _____

Name of Company or Facility Safety Representative: _____

Safety Representative's Telephone Number at Work: _____

Safety Representative's Email Address: _____

Safety Representative's Mailing Address at Work: _____

I hereby certify that the information above is true, accurate, and fairly reflects the safety performance of the entrant facility.

_____ Safety Representative's Signature

_____ Date

MEMBERSHIP CATEGORIES (SELECT ALL THAT APPLY)

☐ NCMA Producer ☐ ICPI Producer ☐ NCMA Associate ☐ ICPI Associate

PAYMENT INFORMATION (*Accounting Code 07-139-4999*)

US$295 Base Entry Fee (includes one (1) facility entry and entry to awards ceremony)

\+ _____ (US$150 x _____) Discounted Additional Facility Entries from the same Company

\+ = _____ **TOTAL** (in US Dollars)

☐ Check enclosed ~**or**~ ☐ Charge my credit card (American Express, Visa, or MasterCard):

Card Number: _____ **Card Expiration Date:** _____

Name on Card: _____ **CVV2 Security Number:** _____

Cardholder's Signature: _____ **Date:** _____

Please email, FAX, or mail your entries no later than January 20, 2012 to:

NCMA Attn: Safety Awards
National Concrete Masonry Association • 13750 Sunrise Valley Drive • Herndon, Virginia 20171-4662
Telephone: 703-713-1900 • FAX: 703-713-1910 • Email: hweiss@ncma.org

THE PRECAST SHOW 2012

FEATURING

International ICON expo Concrete Exposition

& NCMA ANNUAL CONVENTION

TUESDAY, FEBRUARY 28

1:00pm – 5:00pm	NCMA Executive Committee Meetings

WEDNESDAY, FEBRUARY 29

8:00am – 12:00pm	NCMA Committee Meetings
9:00am – 11:30am	NCMA Spouse Welcome Breakfast & Book Talk
1:00pm – 4:00pm	NCMA Committee Meetings
2:30pm – 4:00pm	NCMA Product Development and Creative Concepts Forum
2:30pm – 4:00pm	NCMA Small Business/Family Business Forum
4:00pm – 6:00pm	NCMA Town Hall Meeting
6:00pm – 7:00pm	NCMA Member Networking Reception

THURSDAY, MARCH 1

7:00am – 8:00am	NCMA Industry Challenge Networking Breakfast
8:00am – 12:00pm	NCMA Committee Meetings
8:00am – 3:30pm	ICPI Executive Committee Meeting
8:00am – 5:00pm	ICPI Concrete Paver Installer Courses (Day 1)
8:00am – 6:00pm	NCMA SRW Installer Course
12:00pm – 1:30pm	NCMA Industry Business Luncheon
2:00pm – 3:00pm	NCMA/ICPI CPU Education Tracks
3:30pm – 8:30pm	Grand Opening Reception on Exhibit Floor
5:00pm – 6:00pm	HOT (Hands-On Training – Show Floor)

FRIDAY, MARCH 2

7:00am – 8:00pm	NCMA Breakfast Meeting
7:00am – 12:00pm	NCMA/ICPI CPU Education – Plant Operation Boot Camp
8:00am – 11:30am	NCMA/ICPI CPU Education Tracks
8:00am – 5:00pm	ICPI Concrete Paver Installer Courses (Day 2)
8:00am – 10:00am	ICPI Hardscape North America Steering Committee Meeting
8:00am – 9:00am	ICPI Foundation Program Committee Meeting
9:00am – 10:30am	NCMA Spouse Breakfast
9:00am – 10:30am	ICPI Foundation Board of Trustees Meeting
9:30am – 4:30pm	NCMA SRW Design Seminar
10:00am – 12:00pm	ICPI Contractor Education Subcommittee Meeting
10:00am – 12:00pm	ICPI/NCMA Joint Expo Committee Meeting
Noon – 6:00pm	Exhibits Open
1:00pm – 2:00pm	HOT (Hands-On Training – Show Floor)
1:30pm – 4:30pm	NCMA Spouse Tour, Albin Polasek Museum & Sculpture Gardens
3:30pm – 4:30pm	HOT (Hands-On Training – Show Floor)
4:00 pm - 5:00 pm	NCMA Japanese Concrete Masonry Producers Association
6:00pm – 7:30 pm	ICPI Paver PAC Reception
6:00pm – 7:00pm	NCMA Political Fundraiser
6:30pm – 7:30pm	NCMA PAC Reception
7:30 pm – 9:30 pm	NCMA/ICPI Safety Awards & Design Awards of Excellence Dinner and CSI Design Awards

SATURDAY, MARCH 3

6:30am – 11:00am	NCMA/ICPI Block & Paver Plant Tour
8:30am—10:30am	ICPI Chapter Subcommittee Meeting
7:30am – 10:30am	ICPI Education Committee Meeting
11:00am – 3:00pm	Exhibits Open
3:00pm – 5:00pm	NCMA Board of Directors Meeting
3:00pm – 6:00pm	NCMA/ICPI CPU Education – Plant Operation Boot Camp
3:00pm – 5:30pm	ICPI Government Relations Committee
6:30pm – 8:30pm	ICPI Networking Reception

SUNDAY, MARCH 4

7:30am – 3:00pm	ICPI Registration
8:00am – 12:00pm	ICPI Technical Committee Meeting
12:15pm – 2:15pm	ICPI General Session with Brunch
2:30pm – 6:00pm	ICPI Marketing Committee Meeting
7:00pm	ICPI Social Event

MONDAY, MARCH 5

7:30am – 10:00am	ICPI Construction Committee Meeting
9:00am – 12:00pm	ICPI Dues, Bylaws & Membership Committee Meeting
6:30pm – 8:30pm	ICPI Board of Directors Meeting

TUESDAY, MARCH 6

7:00am – 12:30pm	ICPI Board of Directors Meeting

LEGEND:

NCMA
ICPI
Joint NCMA/ICPI Events
Exhibits Hall Hours

Preliminary Schedule As of 12/02/11

Register for Icon Expo at www.iconexpo.org

When building an earth retaining structure, when is engineering necessary?

The International Building Code, Section 105 (ref. 5), requires a building permit for earth retaining structures over 4 ft. (1,219 mm) in total height or less if they support a surcharge. In addition, many local building codes or officials require a design prepared by a design professional, although there are many locations without provisions for engineered design. Where there is no specific requirement, NCMA suggests the guidelines in the table below. Remember that local code or ordinances supersede industry recommendations.

DESIGN GUIDANCE FOR SEGMENTAL RETAINING WALLS

DESIGN METHOD	WALL HEIGHT	ALLOWABLE SOIL & FOUNDATION CONDITIONS	RECOMMENDED ENGINEERING REQUIRED
Method 1: Non-engineered	≤ 4 ft. (1,219 mm) from leveling pad to top of wall	Sand/gravel, silty sands, sit/lean clays	Use design chart provided by SRW system provider
Method 2: Engineered	> 4 ft. (1,219 mm) from leveling pad to top of wall	Sand/gravel, silty sands, sit/lean clays	Have the design section reviewed/prepared by a registered professional

For Tiered Walls

1. If the total combined height is less than 4 ft. (1,219 mm), the horizontal spacing between walls is at least twice the height of the lower wall (i.e., $H < 4$ ft. (1,219 mm) and $D > 2H_1$), and no surcharges are imposed on the walls, follow Method 1 in Table 1.

   Where: H_1 is the total height of the lower tier and D is the distance between the front of the lower tier to the front of the upper tier.

2. In other cases, follow Method 2 in Table 1.

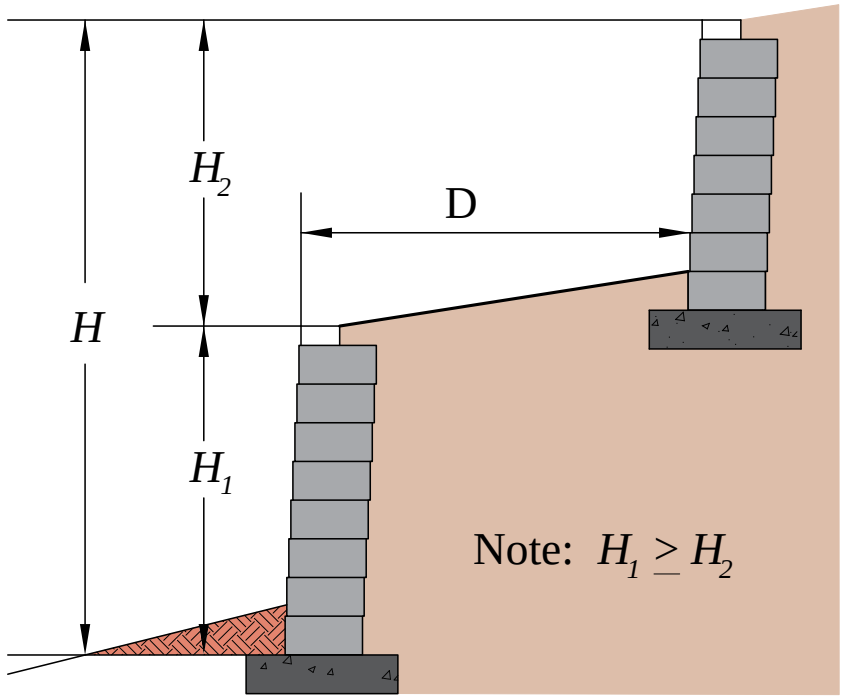

What is the difference between a "cinder block" and a "concrete block"? Are there formal definitions for these products?

Concrete masonry units are colloquially known by many names, most predominately "concrete block", "cinder block", "CMU", or simply "block". Related concrete products, manufactured using similar materials and production methods but used in different applications, include products such as concrete pavers, segmental retaining wall units, and articulating concrete block.

There are many, many opinions and theories that have been proposed through the years (and continue to circulate) that attempt to explain the difference between a "concrete block" and "cinder block". The reality, however, is that these masonry units are essentially the same product produced with the same three basic constituent materials: water, cement, and aggregate.

In the early years of the 20th century as concrete masonry units were beginning to be used with more frequency, producers were looking for ways to reduce the weight of the units to facilitate their use in construction and increase mason productivity. To reduce the unit weight, many producers (but not all) incorporated cinders into their block as an alternative to conventional stone aggregate. Cinders, which include both waste by-products of coal combustion as well as volcanic cinders, were an ideal, cost-effective, lightweight aggregate that was readily available in many areas of the country. Soon after, the terms "cinder" and "block" were perpetually linked. The use of waste by-products such as coal cinders effectively made concrete masonry the first construction material to adopt green, sustainable practices; a century before it was fashionable to do so.

The practice of incorporating coal combustion cinders (as well as other waste by-products) into concrete masonry units continues today. Yet, using cinder aggregates as a lightweight alternative to stone and gravel aggregate may have inadvertently led to another common misconception regarding the term cinder block: that cinder block are lighter (have a lower density) compared to concrete masonry units. While it is true that a concrete block manufactured with cinders will tend to have a lower density compared to a concrete block manufactured with stone aggregate, there are many other lightweight aggregate types (both natural and man-made) that are commonly used in block production. As such, the density of a block is not an indication of whether it has been manufactured with or without cinders.

For many the term cinder block is associated with older concrete masonry; presumably manufactured during the first half of the 20th century. As previously discussed, cinders (both volcanic and coal combustion by-products) continue to be used in block production today – as such, there is no differentiating a concrete block from a cinder block based upon its age.

What has changed over the past 100 years is the technology used today to produce concrete masonry results in a consistently high-quality product with uniform properties. Likewise, codes and standards have evolved through the years to comprehensively address minimum physical requirements for concrete masonry to ensure the long-term durability and performance of these products. Consequently, some associate cinder block with inconsistent or poor quality units produced in early 20th century, which has led some to believe that cinder block are not permitted to be used to construct buildings today. The reality is that all concrete masonry units used in construction must meet minimum requirements established by building codes, regardless of whether they contain cinders or not. Further, regardless of whether you are studying a newly constructed building or a 100 year old foundation – those concrete units are concrete masonry units, CMU, concrete block…or if you prefer, cinder block – although it is nearly impossible to tell visually if a given unit contains actual cinders.

The introduction of new manufacturing technologies, alternative or non-traditional constituent materials, unique unit configurations, and ever-expanding market-driven applications has in recent years pushed the boundaries of what has conventionally been known as a "concrete masonry unit" into areas where some, or most, would no longer associate a given product with historical definitions for these units .

Some of the material differences are small, such as

units that are manufactured with small amounts of recycled or by-product materials that are similar in nature to constituent materials traditionally used in production. Other differences are more substantial, such as compressed earth/clay products whose visual appearance mimics that of concrete masonry but with few other similarities. The question that results is: "At what point are the characteristics of a concrete masonry unit changed so significantly that it evolves into a different type of product entirely?"

While on the surface establishing specific guidance for defining a concrete masonry unit may seem trivial or pedantic, it can have multiple important consequences. One such important consideration is ensuring that building code requirements and design provisions are applied to the construction material for which they were intended – and not extrapolated to other products that share similar attributes or applications, but lack the characteristics to perform similarly. Nevertheless, even contemporary codes and standards are vague in their definition of a concrete masonry unit.

Chapter 21 of the 2009 International Building Code contains the following definitions:

- **Concrete Masonry Unit** – A building unit or block larger in size than 12 inches by 4 inches by 4 inches (305 mm by 102 mm by 102 mm) made of cement and suitable aggregates.
- **Concrete Brick** – A masonry unit having the approximate shape of a rectangular prism and composed of inert aggregate particles embedded in a hardened cementitious matrix.
- **Masonry** – A built-up construction or combination of building units or materials of clay, shale, concrete, glass, gypsum, stone or other approved units bonded together with or without mortar or grout or other accepted methods of joining.

ASTM C1232-09, Standard Terminology of Masonry, contains several definitions that are relevant to this discussion, but does not contain a definition for a generic concrete masonry unit. The introduction of such a definition has been attempted multiple times, but continues to be a point of contention due in part to the broad use of the term.

- **Concrete Brick**, n – a concrete masonry unit made from portland cement, water, and suitable aggregates, with or without the inclusion of other materials. See Specification C 55.
- **Manufactured Masonry Uni**t, n – a manmade noncombustible building product intended to be laid by hand and joined by mortar, grout, or other methods of joining.
- **Masonry**, n – the type of construction made up of masonry units laid with mortar, grout, or other methods of joining.

NCMA TEK 1-4, Glossary of Concrete Masonry Terms, contains the following definitions:

- **Block**: A solid or hollow unit larger than brick-sized units. (See also "Concrete block, concrete masonry unit, manufactured masonry unit")
- **Brick**: A solid or hollow manufactured masonry unit of either concrete, clay or stone.
- **Concrete block**: A hollow or solid concrete masonry unit. Larger in size than a concrete brick.
- **Concrete brick**: A concrete hollow or solid unit smaller in size than a concrete block.
- **Concrete masonry unit**: Hollow or solid masonry unit, manufactured using low frequency, high amplitude vibration to consolidate concrete of stiff or extremely dry consistency.
- **Manufactured masonry unit**: A man-made noncombustible building product intended to be laid by hand and joined by mortar, grout or other methods.
- **Masonry**: An assemblage of masonry units, joined with mortar, grout or other accepted methods.

Historically, a more informal classification of a concrete masonry unit has also considered the following criteria:

- Manufactured on high-speed equipment that use a combination of compression and vibration to consolidate a mix into a mold;
- Manufactured using a no-slump, or nearly no-slump, concrete mix (also referred to as dry-cast concrete);
- Manufactured using inert (including chemically nonreactive), inorganic constituent aggregates, such as those meeting the requirements of ASTM C331 for lightweight aggregates or ASTM C33 for normal weight aggregates;
- Manufactured using conventional cementitious materials including cements meeting the requirements of ASTM C150, C595, C618, C989, or C1157 that, with the addition of water, chemically hydrate to permanently bind the constituent materials together;
  - Produced using other constituent materials, such as admixtures or pigments, which have been established by test or performance to be suitable for use in the production of such units without detrimental impact on the use or performance of the resulting construction.
- Laid or placed, typically by hand, with or without the use of mortar, grout, or supplemental reinforcement;
- Used in building, non-building, and hardscape applications; and
- Used in loadbearing or non-loadbearing applications.

More FAQs are answered in the resouces section of www.ncma.org

ASSOCIATION NEWS

NCMA BOARD OF DIRECTORS ELECTIONS

Congratulations are extended to the following newly elected board members:

- Region I; William Witherow, York Building Products Company, York, Pa., and Dan Longenderfer, New Holland Concrete, New Holland, Pa.
- Region II; Kurt Trump, Tarmac, a Titan America Business, Medley, Fla.
- Region III; Kent Wade, Ruby Concrete Company, Madisonville, Ky.
- Region IV; Patrick Sauter, King's Material, Inc., Cedar Rapids, Iowa.
- Region V; Tom Finch, RCP Block & Brick, Lemon Grove, Calif.
- Region VI; Joseph Santarossa, Santerra Stonecraft, McGregor, Ontario, Canada.

New board members will begin their term of service at the conclusion of the Annual Meeting in Orlando, Fla., March 3. These dedicated professionals serve voluntarily at the expense of their respective organizations and their service is sincerely appreciated.

PLAN AHEAD TO ENTER THE 2011 NCMA/ICPI SAFETY AWARDS

The 2011 NCMA/ICPI Safety Awards is an important industry recognition program that highlights the best of the best safety records among small, medium and large Producer and Associate members of NCMA and ICPI. Entry forms will soon be emailed out to members of the two associations and will be available to download on both websites. Because entry requires a copy of completed OSHA 300 log (or equivalent Canadian injury report), the entry submittal time frame is between Jan. 1-20. The awards will be presented during the NCMA Annual Convention & ICON EXPO in Orlando, Fla., March 2 at the headquarters hotel, Rosen Shingle Creek. The Safety Awards Program Task Group strongly urges the small producers to take advantage of this opportunity to be recognized by entering their facilities that qualify. Categories include: the Milestone Award — highly coveted, for facilities with five, eight or 10 consecutive years of Safety Awards entries with zero recordable injuries; Platinum Awards — the highest level of safety achievement in a single year with zero recordable injuries; Gold and Silver Awards — the best nonzero safety records, in five categories based on production hours. The first entry fee is $295, and additional facility entries are discounted at $150 each. Please note that all entries require a high resolution digital photo of the

LOCAL NEWS

NORTH CAROLINA STATE UNIVERSITY STUDENTS AWARDED CCMA/PATRICK RAND SCHOLARSHIP

The Carolinas Concrete Masonry Association has created a scholarship (worth one semester's in-state tuition) to honor J. Patrick Rand, FAIA, Alumni Distinguished Professor of Architecture, College of Design, North Carolina State University. The scholarship is awarded annually to the student(s) who earn the highest combined rankings from the Structures and Materials (ARC 232) Concrete Masonry design project, and the Architectural Construction Systems (ARC 432) Masonry Design project. After careful analysis, three students tied with the highest combined performances in the two masonry design competitions. They are: Patricia Chenery, Chelsea Sacks and Chase Hoke. Chenery and Sacks are both graduate students in their third semester of the three-and-half-year Track 3 Master of Architecture program. Hoke is a third-year BED/Architecture student. These students are very deserving of this award and will split the scholarship evenly.

Left to right: Patrick Rand, Frank Werner, Patricia Chenery, Chelsie Sacks, Chase Hoke, Byard Stevens

facility, production line or production team, which will be used during the awards ceremony, so please plan to take your photos in advance. Entry deadline is Jan. 20. The NCMA Annual Convention & ICON EXPO runs Feb. 28–March 3. If you have questions about the awards program, contact Heidi Weiss.

BENTLEY RAM ELEMENTS WEBINAR WELL ATTENDED IN REGION I

The fourth webinar this year conducted for structural engineers regarding the RAM Elements software on designing loadbearing masonry walls was held Nov 3. It was well attended with over 200 engineers participating as was the case with the three previous webinars. Co-sponsors of this webinar in NCMA Region I were the International Masonry Institute and Bentley Systems. Promotional assistance was provided by the Pennsylvania Concrete Masonry Association, the New England Concrete Masonry Association and the New York State Concrete Masonry Association. The RAM Elements software has been upgraded to include allowable stress design in accordance with the 2011 MSJC and the 2012 International Building Code. This design method is much more efficient than previous allowable stress design procedures resulting in designs comparable to the newer highly touted strength design procedure, which the software will also perform. The software also incorporates a much more accurate finite element determination of load distribution to be resisted in the design that removes additional conservatism in masonry designs, which also makes it more competitive with other competitive systems. For more information contact NCMA's Director of Technical Publications Dennis Graber.

2011 YORKDALE MEMORIAL AWARD WINNERS RECOGNIZED

Selected from hundreds of peer-reviewed papers published in the past year, NCMA staff engineers Nicholas Lang, Jason Thompson and Dennis Graber were recently honored by ASTM with the 2011 Alan H. Yorkdale Memorial Award for their paper titled Development of a Modified Building Code Equation for Lap Splice Length Incorporating Transverse Confining Reinforcement. This research was conducted at NCMA's Research and Development Laboratory over the past several years and resulted in a reduction to the lap splice design lengths that are now reflected in the 2011 MSJC Code. The Alan H. Yorkdale Memorial Award is presented annually to the authors of the best paper published in the English language concerning clay shale, concrete or sand-lime masonry. The award, established in 1987 by ASTM Committee C15 on Manufactured Masonry Units, honors Alan H. Yorkdale, who for nearly three decades advanced masonry engineering and research while on staff at the Brick Industry Association. The full research paper is available on the NCMA website (www.ncma.org).

ASTM APPROVES NEW ASTM C90 BLOCK CONFIGURATION

One of the most substantive changes to be introduced into ASTM C90 in decades was approved by ASTM. This modification revises requirements that have been a central part of defining concrete masonry units for nearly a century. Under these new requirements, the cross webs that connect the face shells of the loadbearing concrete masonry units can be reduced both in thickness (to a minimum of 3/4 inch) as well as area — thereby allowing a vast array of alternative unit configurations that can

IN MEMORIAM

RALPH J. VIOLA

Ralph J. Viola of Zappala Block Co., Rensselaer, N.Y., passed away Nov. 18. In 1955 he married the love of his life, Sadie J. Zappala. Ralph joined her family business, Zappala Block Co. where he worked for over 55 years. At Zappala Block, he managed the sales counter and office for many years. Customers will remember him for his sound advice and gentle smile. Ralph and Sadie worked side by side for many years, just retiring a few years ago.

NORMAN NELSON

Norman Arnold Nelson of Traverse City, Mich., passed away Nov 6. Norman was born in Flint, Mich. He was president/owner of Grand Blanc Cement Products and and longtime member of NCMA. Norman was active on the board and served as chairman of the board in 1987. During his tenure on the association's board, he was always an enthusiastic supporter and a catalyst for new ideas. One of those ideas eventually led to the formation of the NCMA Education and Research Foundation. Norman was named an honorary member of NCMA in 2004. He will be missed by his many friends and family members.

differ subtly or substantially from the common three web, two cell concrete block configuration. This change would not require that current block shapes and sizes be reconfigured, but does allow considerably more flexibility in how the webs of units are arranged to meet evolving building code requirements and marketplace demands. Other existing unit properties, including face shell thicknesses and minimum unit compressive strength, would remain the same. The benefits associated with a reduced-web concrete masonry unit are numerous, including:

- More sustainable manufacturing practices due to reduced material use and transportation costs;
- Lighter units that increase construction productivity and reduce fatigue and injuries
- for masons;
- Tighter assemblies that miti gate the potential for moisture migration and air leakage;
- Larger cell areas that reduce reinforcement congestion and facilitate grout placement; and
- Substantially improved energy efficiency and thermal properties of mass walls.

NCMA will be scheduling online meetings this winter to address challenges and to review and identify design resources and industry recommendations moving forward. A final printed version of the new ASTM C90 standard
is not expected until January.

Please feel free to contact Jason Thompson or Nick Lang for further information.

GOVERNMENT AFFAIRS NEWS

CONGRESSMAN SHIMKUS INTRODUCES CONCRETE MASONRY CHECK-OFF LEGISLATION

The concrete masonry industry's long-awaited check-off bill was recently introduced and referred to the U.S. House of Representatives Committee on Energy and Commerce to await additional co-sponsors and ultimate passage. Introduced by Reps. John Shimkus, R-Ill., and Tammy Baldwin, D-Wis., the landmark authorizing legislation culminated almost two intense years of consensus building by NCMA throughout our industry and persistence on Capi-

NEW MEMBERS

NEW PRODUCER MEMBERS

- **Carlisle Cement Products Co. Inc.,** Carlisle, PA, www.carlislecement.net. John M. Rumberger, III, President, 717-243-5323, jmrumberger3@embarqmail.com. PCMA member and supporter of check-off. Products: grey block, hardscape products, building materials, Techo-Bloc, Glen-Gery brick, LibertyStone, E.P. Henry, natural and veneer stone. Sponsored by Jan Boyer, PCMA.
- **Standard Concrete Products Co**., York, PA, www.standardconcreteproducts.com. Katherine Parthmer, President of Sales, 717-843-8074, kparthmer@standardconcreteproducts.com. Family owned company serving Central Pennsylvania since 1923. Products: full line of landscaping, masonry and concrete products for contractors and homeowners, on-site concrete block plant and authorized dealer for the complete line of EP Henry products and Bilco doors.

NEW ASSOCIATE MEMBER

- **CarbonCure Technologies Inc.**, Halifax, Nova Scotia, Canada, www.carboncure.com. Robert "Rob" Nivens, President, 902-442-4020, robert.niven@carbonsensesolutions.com. CarbonCure Technology consumes waste CO2, it is patent-pending, industry proven equipment component compatible with most plants (and eligible for LEED points). Sponsored by Don Gordon, Atlas Block, and Bob Thomas.

NEW AFFILIATE MEMBER

- **Continental Products and Services, Inc.**, Hudson, OH, www.continentalproducts.net. Rick Knapper, President, 330-656-5616, rknapper@continentalproducts.net. Dealer/distributor for: Van Poppelen Brothers, Coronado Stone, North American Cast Stone, Robinson Brick, Cornerstone Wall Solutions, CBIS Korfil, Dynamic Color Solutions, Azar Group and others.

If you do business with a company that is not a member, let's recruit them. Contact Membership Manager Heidi Weiss at hweiss@ncma.org.

tol Hill, paving the way, if passed, to an industrywide referendum on the establishment of a commodity check-off program for concrete masonry products, which will enable massive increases in product research and development, market promotion, and educational outreach for designers and builders in the construction industry. For more information, please visit cmucheckoff.com.

OBAMA SIGNS 3 PERCENT WITHHOLDING REPEAL

President Barack Obama recently signed legislation, HR 674, that repeals the 3 percent withholding requirement that would have required all levels of government to withhold 3 percent of most payments to contractors, Medicare recipients, farmers and vendors. This bill was strongly supported by the business community and both the House and the Senate passed the bill unanimously earlier this fall. Included in the final legislation is VOW to Hire Heroes Act amendment, which will provide up to $9,600 in tax credits to businesses who hire unemployed veterans with a service connected disability who have been searching for work for six months or more.

PAYROLL TAX RELIEF AND APPROPRIATIONS MEASURES

Congress must fund the parts of the federal government they have not yet funded by Dec. 16 or pass another short term continuing resolution. Option B is they pass a bill that funds most of the remaining agencies and the controversial agencies are put on a short or long term CR. At the moment, it does look like they will finish their work by Dec. 17. At the same time, Congress is trying to decide whether to extend the temporary 2 percent payroll tax relief that expires at the end of the year, for another year. (Most small business owners get the 2 percent too even if operating as a sole proprietorship, partnership or S Corporation, on at least some of their own personal income/compensation.) Resolution of the payroll tax relief impasse is going to be difficult to achieve. The House leadership released a bill on Dec. 9. There are so many other issues that will need to be addressed, including unemployment compensation reductions and reform, welfare changes, prohibitions on issuance of the EPA boiler rule, broadband spectrum release, flood program revisions, XL pipeline authorization, Medicare issues, energy recovery and conservation.

FOUNDATION NEWS

NCMA FOUNDATION ANNOUNCES NEW SCHOLARSHIP FUND

The John and Marlene Heslip Scholarship Fund for Architectural students was introduced Nov. 3 in Austin, Texas, at a dinner honoring John and Marlene Heslip. The scholarship was developed to honor the longtime service and commitment of both John and Marlene to the concrete masonry industry. The John and Marlene Heslip scholarship will be awarded by the NCMA Education and Research Foundation to students, to encourage the innovative use and application of concrete products their design, and successful integration into masonry or hardscape applications. John served as president of NCMA from 1985–1995. For more information about the scholarship fund, please contact NCMA at 703-713-1900.

BYU FOUNDATION PROJECT PROGRESSING

The NCMA Education and Research Foundation is funding research at Brigham Young University to study the effect of reducing the amount of Portland cement in grout by replacing it with supplementary cementitious materials such as fly ash and ground granulated blast furnace slag. This research has consisted of completing grout compressive strength testing on concrete masonry prisms grouted with masonry grout containing various percentages (up to 85 percent) of class F fly ash and ground granulated blast furnace slag in replacement of the Portland cement. So far, the research team has completed compressive strength testing on units at 56 days of age and will complete the research by testing at 180 days. Preliminary results indicate that grout using larger amounts of supplementary cementitious materials than currently allowed may be viable. The final results are expected by the end of the year.

CLEMSON UNIVERSITY STUDENT TO PERFORM VERIFICATION OF NCMA SOFTWARE

Research funded by a grant from the NCMA Education and Research Foundation will help to maintain the high reputation of version 6 of NCMA's very popular Structural Masonry Design Software due this summer. John Tyler of Clemson University (under the direction of Dr. Russel H. Brown) has been selected to verify the output of the software by writing an independent MathCAD program to check against the software designs. For more information, contact NCMA's Director of Technical Publications Dennis Graber.

INDUSTRY NEWS

INSTITUTE RELEASES REPORT ON INDUSTRY DATA NEEDS

The National Institute of Building Sciences High-Performance Building Data Collection Initiative released a report addressing data needs of the building industry now that the Commercial Building Energy Consumption Survey is no longer scheduled for release by the U.S. Energy Information Administration. The initiative issued the report, "Data Needs for Achieving High-Performance Buildings," during the 2011 National Institute of Building Sciences Annual Meeting, held in conjunction with Ecobuild America at the Washington Convention Center in Washington, D.C. Members of the initiative also discussed recommendations and potential next steps following the report's release. Please visit www.nibs.org for more information.

PERKINS WILL TRANSPARENCY SITE INCLUDES PAPER ON FLY ASH USE IN CONCRETE

New York Design firm Perkins Will has launched a free database aimed at creating greater transparency into building materials containing substances that are publically known or suspected to be associated with an adverse finding in relation to human and environmental health. The database is the result of over two years of review of governmentally published scientific papers, which identify "precautionary" — substances that are known or suspected to cause harm to humans and the environment and can be found at www.transparency.perkinswill.com.

The site also includes a new white paper entitled Fly Ash in Concrete. The paper addresses, from a specifier perspective, issues associated with the use of fly ash in concrete based on their internal review of many diverse opinions and published information.

SPECIAL INSPECTION OF STRUCTURAL MASONRY CONSTRUCTION SEMINAR

Association of California and Nevada, and the Masonry Institute of America, will present a full-day comprehensive course on Special Inspection of Structural Masonry Construction on Jan. 23 in Las Vegas in conjunction with the World of Masonry/World of Concrete. The seminar is aimed at helping inspectors, testing technicians, engineers and building officials identify and check key quality assurance items on the job site. The seminar uses the International Building Code and the MSJC (TMS 402/ACI 530/ASCE 5 & TMS 602/ACI 530.1/ASCE 6) as the primary references and it overviews related ASTM standards and inspection guides. Attendees will learn code inspection requirements, proper placement of materials, mortar and grout, movement joints, how to determine the compressive strength of masonry and appropriate severe weather procedures. This is an excellent seminar for those preparing for the ICC/TMS Special Masonry Structural Inspectors Certification Examination. Details on the seminar and to register online, please go to www.worldofconcrete.com. Look for the TMS logo on the World of Masonry home page.

LOCKDOWN with CoreLock (Pat. pending)
the Secured Rebar Positioner

Available for 8" and 12" block!

- *Corelock is "seated" 1.25" deep into core.*
- *Eliminates movement of positioner during block installation.*
- *Diagonal placement in core insures rebar is always automatically centered.*
- *Does not interfere with wire reinforcement.*

Charlotte, NC
800.849.6722

WIRE-BOND®

Memphis, TN
800.441.8359

www.wirebond.com

INNOVATION IN MASONRY CONSTRUCTION

OMNIA ENGINEERING

SAVE FUEL, INCREASE YIELDS WITH CONSOLIDATED UNIT

Complete Vapor Curing Systems Heats Mixing Water, Heats the Plant
Highest Efficiencies, Lowest Cost

Get the Facts
1-800-541-9516
www.omniaconcrete.com

Steel Block Pallets r3 Steel

New name on the block w/20 years experience

A sus órdenes en Español

Geoff Ridder / Samara Wilson 303.679.0003
Glen Reynolds / Dustin Reynolds 903.856.9000
www.r3steel.com sales@r3steel.com

world class equipment and world class service!

microwave moisture measurement for the concrete industry

Hydronix

692 W. Conway Rd., Suite 24
Harbor Springs, MI 49740
Tel: (231) 439-5000
Fax: (231) 439-5001
Toll-free in USA and Canada
(888) 887-4884

www.hydronix.com

2011 Safety Awards Program
CM ICPI

PLAN NOW TO ENTER THE 2011 NCMA/ICPI SAFETY AWARDS

The entry submittal time frame is between January. 1-20. The awards will be presented during the NCMA Annual Convention & ICON EXPO in Orlando, Florida.on March 2 at the Rosen Shingle Creek hotel.

For more information, contact Heidi Weiss, hweiss@ncma.org or 703-713-1900.

A CM News Archive is Available at www.ncma.org

THE ORIGINAL
www.careercrete.com
Block | Paver | Pipe | Precast | Ready Mix

CONCRETE INDUSTRY ASSOCIATES
EMPLOYMENT AGENCY

PO Box 954
Grand Haven, MI 49417
Tel: 616-842-0227
E-mail: geb@careercrete.com

member of NATIONAL CONCRETE MASONRY ASSOCIATION

Have You Taken Advantage of all the resources available on the NCMA web site?

- e-TEK
- Bookstore
- Design Resources
- TEK Technical Information
- Research Reports
- Metric Design Guidelines
- Energy Code Options for CMU
- Sustainability Information
- Technical Services
- Technical Publications Database
- Fire and Acoustics
- Design Awards Program
- Marketing Resources
- Articles for Print and Radio
- Camera Ready Artwork
- Fire Safety Materials
- Mold Materials
- Print Ads
- Safety Resources
- eSafetyLine Software
- Opportunities/Leads
- Helpful Links
- Fire Safety Associations
- Mold Resources
- Workforce Development

VISIT TODAY
www.ncma.org

Marketplace

• Steel Racks
• Steel Pallets

D & M WELDING CO.

Domestic & Worldwide Service.

• Steel Products
• Sand Hoppers

Our company has the experience you are looking for! We have been producing Steel Pallets & Steel Racks since 1973 and are former Concrete Block Producers.

Jeff McCarroll ■ 800 • 860 • 6065 ■ 937 • 293 • 5404 Fax
■ dmwelding@att.net

iwi group LLC

member of

Never climb into your mixer again!

Heavy Hitter
Long Reach
Chisel Scaler

Can extend to 5 feet with included pipe extensions!

Phone: (800) 247-2819 or (770) 840-7060
sales@iwigroup.com www.iwigroup.com

BLOCK AND PAVER INDUSTRY SPECIALIST
NATIONWIDE SEARCH & RECRUITMENT

• OPERATIONS AND PLANT MANAGERS
• SHIFT SUPERVISORS • MACHINE OPERATORS
• MAINTENANCE • SALES

UNITED EMPLOYMENT GROUP, INC.

Michael S. Stauffer • 610-351-8070 • Cell: 610-417-5503
mstauffer@UnitedEmploymentGroup.com

www.UnitedEmploymentGroup.com

ALABAMA PALLETS

"Your Dependable and Experienced Steel Pallet and Rack Source for the Concrete Block and Paver Industry"

Mike Crancer
Phone: (636) 861-7300
Toll Free: (888) 530-7337
Fax: (636) 861-7335
E-mail: mcrancer@msn.com
www.steelpallets.org

Visit us at ICON EXPO booth #800, March 1-3, 2012, Orlando, FL

STRATA
Global GeoSolutions

- **HIGHEST QUALITY GEOGRIDS**
- **BEST CUSTOMER SERVICE**
- **COMPETITIVE PRICES**

WWW.GEOGRID.COM

Marketplace Ads are Affordable and Effective.

Let NCMA design one for YOU.

For advertising information, call NCMA 703-713-1900.

AIA Continuing Education Learning Program

Learning Units Reporting Form

AIA Questions (Circle the correct answer)

1. Guardrails are designed to withstand specific loads such as:
   a. Impacts loads
   b. Live loads
   c. No loads need to be added
   d. a and b only
2. What SRW backfill materials are less affected by inclement weather construction conditions?
   a. Clean gravels
   b. Clayey soils
   c. Silty soils
3. In the Lake Sumter story, the SRWs and corrugated steel plate system reduce the subgrade remediation needed
   a. True
   b. False
4. In the Lake Sumter story, the SRWs were used as a structural veneer to the main bridge structure
   a. True
   b. False
5. Retaining walls never require engineering
   a. True
   b. False
6. What triggers engineering design for retaining walls in the code?
   a. Walls taller than 4 ft
   b. Surcharges present on the walls
   c. Segmental retaining walls always need engineering
   d. a and b only
7. NCMA recommends using the engineering industry guidelines were there isn't local requirements
   a. True
   b. False
8. Do local codes or ordinances supersede industry recommendations?
   a. Yes
   b. No
9. Small tiered walls never need engineering
   a. True
   b. False
10. Tiered walls don't need engineering when:
    a. Combined height is less than 4 ft.
    b. Tiers are farther than 2*height of the lower tier
    c. No surcharges are present
    d. All of the above

To receive one learning unit, read "HNA Hardscape Project Award Winners", "Crossing Lake Sumter", "NCMA Frequently Asked Questions", and complete the questions on this page. Return this form to the National Concrete Masonry Association.

Return forms before December 2012 to receive learning unit credits.

☐ I am a non-AIA architect or design professional. Please mail me a certificate stating that the learning units earned can be used to fulfill other continuing education requirements.

Send completed Report Form to:
AIA CES, National Concrete Masonry Association,
13750 Sunrise Valley Drive,
Herndon, VA 20171-4662,
or fax to NCMA at 703-713-1910.

If you have questions, please contact NCMA at 703-713-1900.

November | December

AIA Member Information:

Name

Address

City State/Province Zip Code

Phone Fax

E-mail ID Number

I certify that the above information is true and accurate to the best of my knowledge. I have complied with the AIA Continuing Education Guidelines.

Signature Date

☐ Check here to request a catalog of concrete masonry technical literature.

CONCRETE MASONRY DESIGNS

13750 Sunrise Valley Drive
Herndon, VA 20171-4662

A PUBLICATION OF
NATIONAL CONCRETE MASONRY ASSOCIATION
WWW.NCMA.ORG

November | December 2011

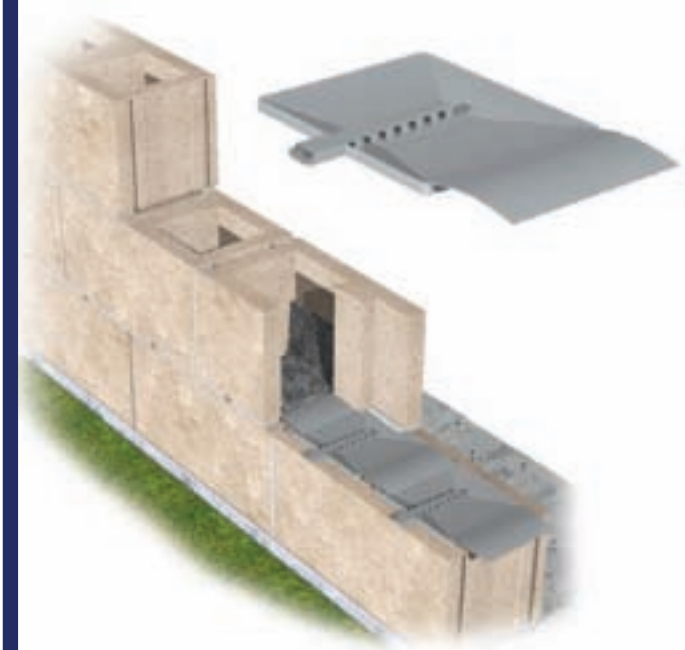

Patent No. 6,912,820 & No. 7,448,175

Through-wall flashing for single-wythe masonry walls

BLOK-FLASH® by Mortar Net® USA

- Saves installation time over conventional methods
- Reduces thermal bridging, helping to maintain the wall's R-value integrity
- Eliminates the need for multiple sizes of architectural CMU
- Specified for many years by leading architects and retail chains

800-664-6638 MortarNet.com

Makers of Mortar Net® with Insect Barrier™, TotalFlash®, Blok-Flash®, BlockNet®, HouseNet®, Stone & Stucco Drain™, & Mortar Net® Weep Vents™

Mortar Net® USA LTD.