May | June 2012

CONCRETE MASONRY DESIGNS

NCMA/ICPI Design Award of Excellence in Pavers

Production History of Segmental Retaining Wall (SRW) Systems

Costco at Harbor Hill

Chateau Fromage

2011 Safety Award Winners

Continuing Education Learning Program

Beautiful. Distinctive.
Homeowner Approved.

More than just a pretty face.

It's true. It's not just breathtaking natural beauty and elegance that make a Keystone wall remarkable. It's what you don't see that makes a big difference. Our pin connection system affords you unmatched design versatility, strength, and ease of installation. **With Keystone** – you can easily create your very own backyard paradise.

KEYSTONE® GREEN SOLUTIONS

KEYSTONE® RETAINING WALL SYSTEMS
A CONTECH COMPANY

To view Keystone's complete line of innovative products and project ideas, visit us online at ***www.keystonewalls.com/adcm.html*** *or call 1-800-747-8971. Keystone is proud to be a subsidiary of Contech Engineered Solutions, LLC.*

CONCRETE MASONRY DESIGNS

May | June 2012

4 NCMA/ICPI Design Award Winner - Excellence in Pavers
Palmetto Bay Village Hall

7 Production History of Segmental Retaining Wall Systems (SRW)
Hisorical overview of the production of SRW units

12 Costco at Harbor Hill
The Costco at Harbor Hill serves as the anchor for a large master-planned community in Washington state.

14 Chateau Fromage
This small weekend home blends into the picturesque surroundings and the passive design means big energy savings for the owners.

26 NCMA Frequently Asked Question
What is the minimum required compressive strength for masonry mortars?

28 2011 Safety Award Winners
This years award program was a banner year for safety with a record number of entries and a record number of Milestone Award Winners.

17 TEK 6-12D Concrete Masonry in the 2009 Edition of the IECC

19 TEK 18-2B Sampling and Testing Concrete Masonry Units

32 News

36 Marketplace

39 Continuing Education Learning Program

Concrete Masonry Designs magazine show-cases the qualities and aesthetics of design and construction using concrete masonry.

Concrete Masonry Designs is devoted to design techniques using standard and architectural concrete masonry units, concrete brick, unit concrete pavers, segmental retaining walls, and other concrete masonry products around the world. We welcome your editorial comments, ideas, and submissions.

Copyright 2012 by the National Concrete Masonry Association. All rights reserved. Contents may not be reprinted or reproduced without written permission from NCMA.

Concrete Masonry Designs is published bi-monthly by the National Concrete Masonry Association (NCMA), and distributed to advance and support the concrete masonry and hardscape industry and public interest.

NATIONAL CONCRETE MASONRY ASSOCIATION
Sustainable Concrete Products for Structures and Hardscapes

Send address corrections and subscription inquiries to:
NCMA Sales and Marketing Department
13750 Sunrise Valley Drive
Herndon, VA 20171-4662
703-713-1900
Fax 703-713-1910
www.ncma.org

Publisher:
Robert D. Thomas

Editor:
Mary Arntson-Terrell, mterrell@ncma.org

Associate Editors:
Dennis W. Graber, P.E.
Gabriela Mariscal

Advertising:
Heidi Weiss, hweiss@ncma.org

NCMA/ICPI DESIGN AWARD WINNER

PALMETTO BAY VILLAGE HALL

PROJECT LOCATION
Palmetto Bay, Florida

LANDSCAPE ARCHITECT
O'Leary Richards Design Assoc., Inc.
Miami, Florida

ENGINEERS
Camero and Associates Engineering
Miami, Florida

MASONRY CONTRACTOR
Oliva Brick
Miami, Florida

BLOCK PRODUCER
Hanson Hardscapes
Pompano Beach, Florida

PHOTOGRAPHY
Hanson Hardscapes

Located immediately west of beautiful Biscayne Bay, the Village of Palmetto Bay is a vibrant community of more than 25,000 residents who enjoy its beautiful surroundings and family-oriented atmosphere. The Village's new municipal center houses the police station, building department, municipal office and council chambers. With 40,000 square feet (3716 square meters) of surrounding landscape, landscape architect Kathy O'Leary Richards was challenged with creating an environment that complemented the building's Spanish revival architecture, yet was also functional. O'Leary Richards selected a palette of building and plant materials that exceeded LEED requirements, while creating spaces that were aesthetically pleasing and met the project requirements.

Approaching the project from the south, an expansive lawn framed by dual allées of broad canopy live oaks – iconic of the Old South – provide a tranquil setting for viewing the Village's sculpture collection. Beyond the formal canopy of oaks, a paved plaza lined with majestic Bismarkia palms serves at the ceremonial entrance to the Village's main plaza. There were three major spaces O'Leary Richards needed to design around the new village center: the oak-lined civic green, the Bismarkia palm court and the entrance plaza.

To break down the large scale of the palm court, O'Leary Richards selected water permeable pavers and designed a compass

The Design Awards jury felt that this project "stands out in all aspects of landscape design." Not many architects or designers would dare to use green-colored pavers and this project has three shades. "The designers skillfully used the colors to blend the design without making it look bold or overpowering." In addition, "the attention to environmental concerns makes it a project that brings landscape design to a very high level of excellence."

rose in the form of a geometric palm, ultimately becoming the project's signature public art piece. "The layout of the compass rose was challenging," says O'Leary Richards. Aside from the careful placement of pavers to lay the rose pattern, "in order to meet LEED guidelines, the light and dark colors needed to be used in proportion," adds O'Leary Richards.

The paver manufacturer and landscape architect worked collaboratively to create a series of custom colors – multihued emerald, gold and cerulean – that would complement the surrounding buildings and environment. To extend the flow of the central design, the pavers were also used in the surrounding public spaces which included shaded seating areas along the park and plaza walkways.

According to O'Leary Richards, the 4- x 8-inch (101 - x 203-mm) water permeable interlocking paving system was selected because "side by side cost comparisons indicated that it would be more cost-efficient and provide many more environmental benefits by contributing to sustainability through storm water management" than other paving materials. Plus "the pavers were easier to manipulate for the intricate design." The pavers were installed on a 2-inch bed (50-mm) of crushed screening stone, pollution control fabric, 7-inch (177-mm) deep stone base, a non-woven impermeable geotextile fabric on top of 12-inches (304-mm) compacted sub-grade.

The installation system allows rain water to infiltrate into the unique sub-base, virtually eliminating storm water runoff and treating it at the source without the need for traditional draining systems. According to O'Leary Richards, "The sub-base removes up to 99 percent of pollutants (i.e. oils and heavy metals) and stores the clean water until it can be released into the ground below."

The 20,000 square feet (1,858 square meters) of parking and roadway area that are paved with the units treat and siphon storm water into a 65,000 gallon (246,051 liter) cistern, harvesting it for grey water reuse including a low water emission drip irrigation system and toilet flushing for the buildings. According to Jose E. Gonzalez Jr., architectural representative for the paver licensor, "For heavy traffic right-of-ways and parking lots 4- x 8-inch (101- x 203-mm) units are the most common choice because of their interlocking properties and threshold for the heaviest daily axle loads." CMD

Join the Conversation about
Energy Effiency

What's the R-value of that wall?

Can CMU provide continuous insulation per the IECC?

How can I meet or exceed the energy code requirements using CMU?

Arm yourself with a resource that can answer these questions and many more!

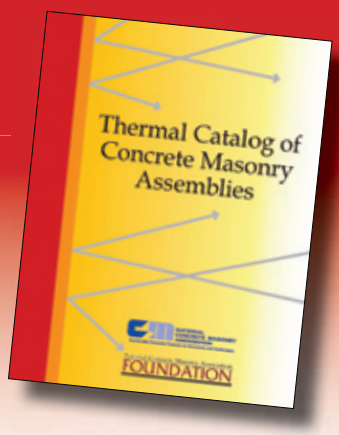

The Thermal Catalog of Concrete Masonry Wall Assemblies is a NCMA publication that presents total R-values for a wide range of concrete masonry wall assemblies in a concise, attractive, and easy-to follow format. Listed are concrete masonry wall sections that can meet the minimum energy code requirements or provide superinsulated wall sections to gain additional points for sustainability rating purposes. This book will become your key resource for selecting energy efficient concrete masonry assemblies. Full-color printed copies are available for purchase from the NCMA Bookstore (NCMA Item Number TR233). Member: $8.00, Professional: $11.20, Retail: $16.00. Visit the bookstore online at www.ncma.org or call 703-713-1900.

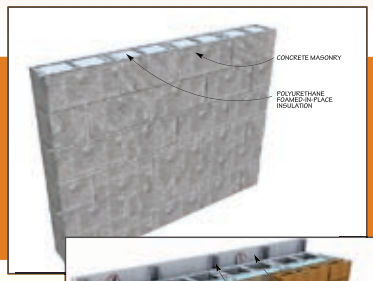

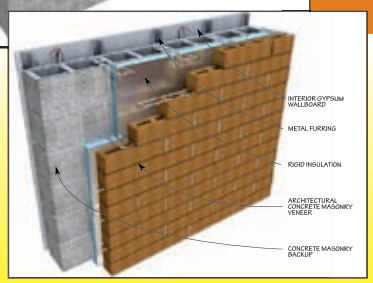

Each page of the Catalog addresses a different assembly and includes a detail drawing and brief notes on the features of that construction. There is a section for single wythe assemblies and a section for multi-wythe assemblies.

Concrete Masonry Assembly R-Values, hrft² °F/Btu

Density of CMU, pcf	6-in. Concrete Masonry				8-in. Concrete Masonry			
	Ungrouted	Lightly reinforced	Heavily reinforced	Fully grouted	Ungrouted	Lightly reinforced	Heavily reinforced	Fully grouted
85	5.9	4.2	3.0	1.7	7.9	5.3	3.7	1.9
95	5.0	3.7	2.8	1.6	6.7	4.6	3.3	1.8
105	4.2	3.3	2.5	1.5	5.6	4.1	3.0	1.7
115	3.6	2.9	2.3	1.4	4.7	3.6	2.7	1.6
125	3.1	2.6	2.1	1.4	4.0	3.2	2.5	1.5
135	2.6	2.3	1.9	1.3	3.4	2.8	2.3	1.5

Density of CMU, pcf	10-in. Concrete Masonry				12-in. Concrete Masonry			
	Ungrouted	Lightly reinforced	Heavily reinforced	Fully grouted	Ungrouted	Lightly reinforced	Heavily reinforced	Fully grouted
85	9.6	6.1	4.1	2.1	11.9	7.1	4.6	2.3
95	8.1	5.4	3.8	2.0	9.9	6.3	4.2	2.1
105	6.7	4.7	3.4	1.9	8.2	5.5	3.9	2.0
115	5.6	4.2	3.1	1.8	6.8	4.9	3.5	1.9
125	4.7	3.6	2.8	1.7	5.7	4.3	3.2	1.9
135	4.4	3.5	2.7	1.6	4.7	3.7	2.9	1.8

Each page of the Catalog also includes a table of R-values for a myraid of common constructions, including:

- 6-in., 8-in., 10-in. and 12-in. concrete masonry units
- concrete densities (85-135 pcf)
- various types and amounts of insulation
- and with 4 types and of reinforcement
  - ungrouted walls
  - lightly reinforced walls
  - heavily reinforced walls
  - fully grouted walls

THIS PUBLICATION IS AVAILABLE FOR FREE DOWNLOAD AT WWW. NCMA.ORG

PRODUCTION HISTORY OF SEGMENTAL RETAINING WALL (SRW) SYSTEMS

INTRODUCTION

Concrete building materials are the most widely used construction material for buildings, mass structures and earth retaining structures worldwide. The use of concrete dates back to ancient times when the Egyptians made a composite of lime and gypsum binders to create a substance that closely resembled modern concrete (Ref. 1). A few thousand years later some of those ancient structures are still standing.

Dry-cast or zero-slump concrete block products began in the United States in 1876, making one block unit at a time. In the mid 1980's, a hundred years after introduction of zero-slump concrete production, zero-slump concrete segmental retaining wall (SRW) units were created and marketed nationally and internationally as an economical solution for earth retaining walls. At about the same time as SRW's entered the market, synthetic geogrid soil reinforcing was introduced to the Civil Engineering market. By combining the technologies of SRW's and geosynthetic soil reinforcement, structurally strong and economical retaining walls were developed. Today we have walls over 75 ft (22.9 m) tall performing well and SRW manufacturing worldwide. It has been estimated that over 300,000,000 sf (27,870,910 m^2) annually of SRW retaining walls were sold into the world market in the mid 2000's.

Production of zero slump products has improved significantly since the first block was produced in 1876. Masonry units were produced with a compressive strength of only 1,000 psi (6.9 MPa) and today, ASTM C90 calls for 1,900 psi (13 MPa). SRW products have a minimum compressive strength of 3,000 psi (20.7 MPa) and some products have been produced to over 8,000 psi (55.2 MPa).

Production of these economical and high strength units was the key to market success.

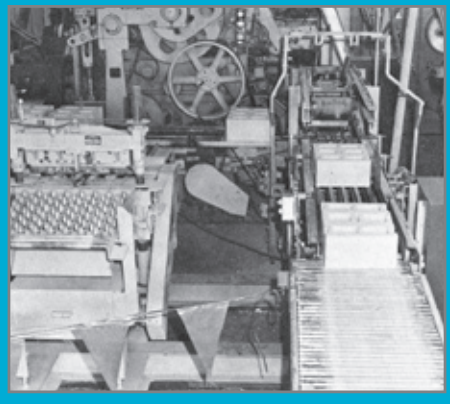

HISTORICAL DEVELOPMENT

DEVELOPMENT OF ZERO-SLUMP (DRY-CAST) CONCRETE

The trend to develop hollow core building products began in 1850 with a British inventor named Joseph Gibbs (Ref. 2). The Gibbs patent described a method of building solid concrete walls by means of timber forms or lattices on each side. Also included in the patent was the specification the block could be hollow cast, with the hollows to be filled with concrete, after each course. The process developed by these early inventors was to add just enough water to form the concrete paste, form the products, compress out the air and allow the products to be stripped out of the mold within about 10 minutes. In years following several systems were invented to manufacture hollow blocks. It was found that these methods of construction produced products with sufficient strength and durability for building construction.

In 1897 Harmon S. Palmer was credited with the development of the first commercial process for the manufacture of concrete blocks in the United States (Ref. 2). These early machines were the hand-tamp machines, when a three-man crew could produce 200 blocks in the 10-hour day.

In the early 1900's dry-cast concrete products were gaining acceptance and popularity as they were structurally sound, economical to produce and relatively easy install. By 1905, an estimated 1500 companies in the U.S. were manufacturing concrete blocks as structural building materials.

EARLY BLOCK PRODUCTION

This is how concrete block was made in the very early days—and for a good many years thereafter in backyards and basements. Pictured here is the process involved in turning out one concrete block on a model of the early hand-tamp machines (Ref. 2).

The workman **fills the** machine with cement and aggregate, hand mixed on the ground.

He hand tamps the mixture.

He then discharges the **finished** block.

And then he carries it to a crude pallet for curing.

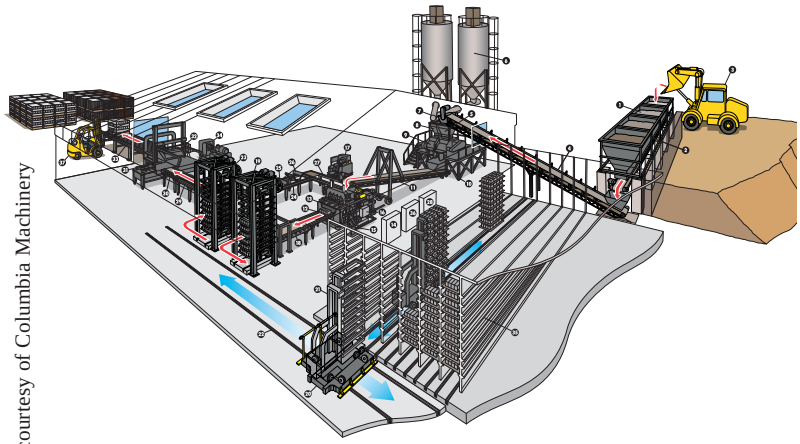

Image courtesy of Columbia Machinery

Figure 1: Modern Batch Plant

MODERN PRODUCTION

Today's production equipment uses the same concepts as these early machines but with much more energy and directional compaction for denser units, faster and more accurate mixing and material movement, accurate dimensional control and automated production control.

In the period from 1905 to the 1970's production equipment was developed to be bigger, faster, and produce more economical products. This was a significant improvement in production capabilities.

PRODUCTION

The 1980's brought the introduction of zero-slump products to the landscape markets with SRW products and interlocking concrete pavers. This new market required significant increases in production demand, quality control requirements and needs for more durable and stronger products. The 1980's was also when computers and solid state controls entered the market. Instead of batching materials based on "look and feel" of the mix, microwave probes were installed in the feed bins to measure moisture, load cells were installed on feed lines to control batching materials, and probes were installed in the mixer to accurately control the water/cement ratio of the mix. All of these inputs feed to computers which controlled the quantities of each batch making consistent quality throughout the production cycle.

Figure 1, above, represents a modern batch plant. We can see:

- Four to five feed bins for sand and gravel
- Each feed bin has load cells for accurate batching
- The plant shown here has two cement silos for storage of cement, some have standard cement, white cement, or a higher quality cement for special applications.
- Some plants have two or more mixing drums where each drum may have a different colored mix to produce multi-colored concrete blends into the mixer.
- The mix is passed into the mixer. When properly mixed it is dumped onto a feed belt to the block machine (See molds on figure 2).
- The units are produced to a specific density and the required manufacturing dimension.
- Product comes out of the compaction equipment and is automatically stacked on drying racks
- When the racks are full, an automated lift moves the drying rack from the machine into the moisture curing rooms.
- When the products have cured, the automated lifts take the racks from the curing rooms to the splitting line or secondary processing line where it is processed and stacked on the pallet for yard storage.

In many operations this process is fully automated requiring operators to observe machine performance, perform quality control checks, and move the product from the plant to the yard storage areas. Recall a three man crew in 1900 could produce 200 units per 10 hour day; today a three man crew can produce over 6,000 units in one 8 hour shift on one machine.

CHEMISTRY

Product equipment development evolved with great strides to produce more product with higher quality, but that was not enough to get the products required by the market. The secret to good concrete is a low water ratio, higher density, higher cement content and a properly graded mix to provide a dense, compacted structure. Low slump concrete requires a low water content to be self supporting from the time it comes out of the mold to the time it is cured. Plasticizers and water reducing agents were developed to help produce quality products with the lower water contents and still hydrate the cement. Zero slump concrete has a more open void structure than wet-cast concrete and thus higher permeability. Moisture draining through the product may carry free salts to the surface causing a white dust, or efflorescence. Efflorescence control mixtures have been developed to reduce the efflorescence in masonry products.

Road salts used for deicing in northern climates introduced chlorides onto the concrete. For concrete, magnesium chloride and calcium chloride produce severe crumbling, moderate fracturing and discoloration of the concrete. Better plasticizers helped produce a more dense concrete mix to reduce the permeability and infiltration of chlorides. Air entrainment ad mixtures were developed to provide air entrainment to zero slump concrete, a higher cement content and higher compaction density, these products perform much better in this severe environment.

SRW UNIT SIZES

SRW units are produced on standard concrete masonry production equipment. The standard masonry unit used for building construction is eight inches tall, eight inches wide, and 16 inches long (8 x 8 x 16 in.) (203 x 203 x 406 mm). As the basic product for early production needs, block manufacturing equipment was designed around this shape of unit. Several other size units are available but this 8 x 8 x 16 unit is the main building block. A three at a time machine could produce three, 8 x 8 x 16 units during each cycle. A five at at time machine could produce five units at a time.

Maximum height of units may be up to 12 in. (305 mm) on some machines and minimum height of three inches. Block curing systems were developed for 8 in. (203 mm) high products, so the taller units are possible but very limited in production due to the handling equipment. The length of the mold box for a three at a time machine is 24 in. (610 mm) (side to side in the machine) and the depth of the mold box is 18 in. (457 mm) (front to back in the machine). For the larger five and six-at-a-time machines the mold boxes are much larger to accommodate the product and designed for larger block machines.

The popular sizes of SRW units of uniform size are:

- 8 H x 18 W x 11 to12 D in. (203 x 457 x 279-305 mm)
- 8 H x 18 W x 20 to 24 D in. (203 x 457 x 508-610 mm)
- 6 H x 16 W x 11 to 12 D in. (152 x 406 x 279-305 mm)
- 4 H x 18 W x 10 to 12 D in. (101 x 457 x 254-305 mm)
- 3 H x 16 W x 10 to 12 D in. (76 x 406 x 254-305 mm)

The typical depth (face to tail) of the units is 11 to 12 in. (279 - 305 mm). This depth provides a unit that is easy to construct

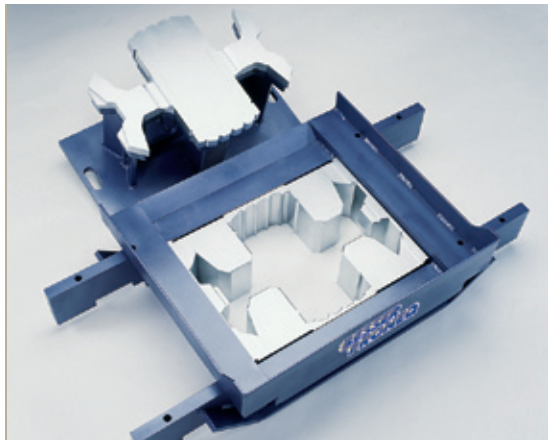

Image courtesy of Besser

Figure 2: SRW Mold

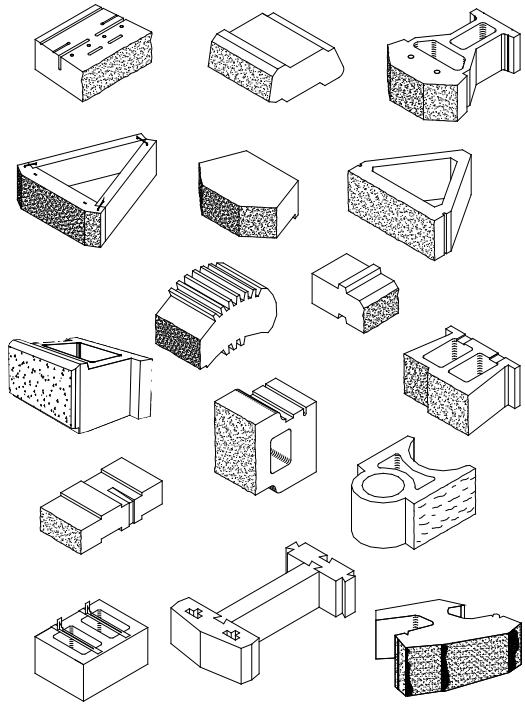

Figure 3: Common SRW Unit Shapes

with, provides good structural stability and is economical. There are deeper units available (20 to 24 in. [508 - 610 mm]); however the cost to produce the larger units is more than the 12 in. units (305 mm) due to one unit per cycle and more concrete fill (See figure 3 for SRW examples). To be competitive contractors switched to the smaller depth unit since both units have the same exposed face area. With soil reinforcement both are structurally sound. The larger units are still produced and are still popular in some markets. Modular systems have been developed with attractive face panels and attachable tail sections for flexibility in design or in areas where there is not enough space for geogrid reinforcement. (See figure 4.) All units can be manufactured using recycled content--making SRW units competitive in the green product market.

In the late 1990's, multi-piece SRW products came into the market with sizes ranging from three-inches (76-mm) wide to 24 in. (610 mm) wide with full-height (6 or 8 in. high [152 or 203 mm]) and half-height (3 or 4 in. [76 or 101

Image courtesy of Allan Block

Figure 4: Modular Unit with Recycled Content

Image courtesy of Allan Block

Figure 5: Multi-Sized Units

Image courtesy of Versa-lok

Figure 6: Hard-Split SRW Facing

mm]) units. The combination of these architectural units created a more natural look with random shaped face units. There are systems in the market with two, four, five, or six different sized units in the same wall panel (see figure 5).

Single depth facings units were developed mostly for gravity and mechanically stabilized earth (MSE) wall construction and the multi-piece systems were developed for the architectural landscaping applications.

ARCHITECTURAL DESIGN

Markets for the SRW products began as residential and small commercial projects where the SRW's were alternatives to timber walls, boulder walls or poured concrete walls. Face textures were either straight faced units (mold finished) or a fluted or textured face created in the mold. The standard colors were concrete gray or tan.

Market demand grew quickly for SRW products and producers developed more facing options for the consumer.

HARD-SPLIT

In the mid 80's manufacturers incorporated the splitting system to break a thin slice off the face of a cured SRW unit to produce a more rustic appearance.

The split aggregates and sometimes multicolored aggregates gave the product an attractive appearance (See figure 6).

ABRADED™ OR SOFT-SPLIT™

Mold designers and producers developed different systems in the mold that would roughen the wet-concrete face as the unit was extracted from the mold. These systems yielded an attractive appearance and reduced production costs by eliminating the handling, splitting and re-grinding of the disposed block surface.

STAMPED FACE

Plain facing textures, split facing, and abraded faces were available in the market and the next step was a stamped face unit produced in the mold, extruded and cured. These units are popular in the lawn and garden retail markets and some commercial product lines (see figures 4 and 7).

TUMBLED FACE

Manufacturing a 'rock-like' texture in a mold box leaves sharp, 90 degree edge on the top and bottom of the units. Tumbling is a process where the units are placed in a round drum and rolled or tumbled. As the units collide with other units or impact the edge of the drum, the outside sharp edges are chipped off, rounding off the machine made surfaces. Several abraded and smaller hard split units are tumbled to create a more natural stone appearance (see figure 8).

CONCRETE COLORS

When SRW's first entered the market they were the standard concrete grey, tan or brown color that were typical for concrete masonry products. As demand continued to develop manufactures developed capacity to produce colored units and many added systems to produce variegated colors combining two or three different colors to give the units a more natural colored appearance (see figure 9).

SPECIFICATIONS FOR SRW'S

The ASTM is the standards organization in the U.S. During the beginning of SRW production the standard dry cast block specifications were applied to the SRW units, ASTM C90. These were:

- ASTM C90, Standard Specification for Loadbearing Concrete Masonry Units
- Compressive strength – 1900 psi (13.1 MPa) (minimum net average)
- Absorption – 18-13 pcf (288-208 kg/m^3)
- Tolerance +/- 1/8 in. (3 mm) from the manufacturers published values.

As the industry developed SRW products required higher compressive strengths to meet the requirements set by the engineering community for wet-cast concrete products. As this was evolving, industry decided a new ASTM standard was needed that addressed the manufacturing and production needs of SRW products as their use, application and requirements were different from the load bearing products used for building masonry structures. This new standard was:

ASTM C1372, Standard Specification for Segmental Retaining Wall Units

- Compressive strength – 3,000 psi (20.7 MPa) (minimun net average)
- Absorption - 18-13 pcf (288-208 kg/m^3) depending on the density
- Tolerance - +/- 1/8 in. (3 mm) from the manufacturers published values

In the late 1980's, SRW products were introduced into the highway transportation market. The American Association of State Highway Transportation Officials (AASTHO) Bridge Manual (Ref. 3) requirements for concrete products were:

- Normal Weight and Structural Lightweight Concrete (AASHTO 5.4.2)
- Compressive strength - 4,000 psi (27.6 MPa)
- Tolerance - +/- 1/16 in. (1.6 mm) from the manufacturer's published values

QUALITY CONTROL / QUALITY ASSURANCE

Product capacities were increased significantly to meet the market demands, chemicals and admixes were developed to enhance manufacturing and product performance and specifications were developed for using SRW products in more critical applications. Introduction of the products into the highway markets required higher quality control standards and product checks to ensure quality products were used in manufacturing met the department of transportation specifications.

Most manufacturers of SRW products have a quality control program in place and published QA/QC procedures. Units are tested on a routine bases for strength, absorption, density and in northern climates, or durability.

SUMMARY

Production and quality of masonry concrete came a long way since the first zero slump units were produced in 1850 up the 1980's. In the last 25 years there have been remarkable improvements in production with solid state electronics, increased market demand from the landscaping markets and surprising improvements in the architectural finishes available. Concrete mix designs and manufacturing techniques have been improved to provide more durable units for severe environments and chemical additives were developed to help achieve better compaction, greater density and even air entrainment.

Customer desires prompted manufacturers to produce units with a variety of color options, solid color or variegated color mixes. Equipment manufacturers and designers were able to make multi-piece SRW units to create very pleasing architectural designs for retaining walls.

A combination of a colorful SRW retaining wall, permeable paver walkways and drives with surrounding gardens with concrete edger's is a perfect Low Impact Design (LID) solution using environmentally friendly components to create an affordable, sustainable solution to any project that not only improves the value of the property and solves structural issues, but helps save the environment.

As Dr. Richard Bathurst, a leader in Geotechnical Engineering, stated at an international meeting in Sydney, Australia in 1999, "SRW's and geosynthetic reinforcements have revolutionized Civil Engineering for earth retaining structures". We believe his statement was correct and it just continues to get better. CMD

Image courtesy of Anchor Wall

Figure 7: Stamped Face

Image courtesy of Keystone

Figure 8: Soft-Split SRW Facing, Tumbled

Image courtesy of Rockwood

Figure 9: Color Options

REFERENCES

1 www.britannica.com
2 Bell, Joseph, From the Carriage Age….. to the Space Age, NCMA 1969.
3 AASHTO LRFD Bridge Design Specifications, Fifth E., 2010.
4 ASTM C1372 - 11 Standard Specification for Dry-Cast Segmental Retaining Wall Units
5 ASTM C1262 - 10 Standard Test Method for Evaluating the Freeze-Thaw Durability of Dry-Cast Segmental Retaining Wall Units and Related Concrete Units
6 ASTM C90 - 11b Standard Specification for Load-bearing Concrete Masonry Units

Costco at Harbor

PROJECT:
Costco Wholesale
Gig Harbor, WA

ARCHITECT:
MulvannyG2 Architecture
Bellevue, WA

GENERAL CONTRACTOR:
Ferguson Construction
Seattle, WA

MASONRY CONTRACTOR:
The Henson Company, Inc.
Seattle, WA

BLOCK PRODUCER:
Basalite Concrete Products, LLC
Dupont, WA

PHOTOGRAPHY:
Jeff Beck Photography
Seattle WA

The Costco at Harbor Hill in Gig Harbor rests on 17.5 acres of a 320-acre (129-hectare) development, master-planned by the Olympic Property Group. The 152,000 square foot (14,121 square meter) warehouse is the anchor of the 23.5-acre (9.5-hectare) retail village comprised of five additional specialty retail buildings. The Costco building, along with surrounding retail buildings, needed to be designed and constructed as a unified architectural expression, as required by the city. A design palette was created, integrating concrete masonry, steel, glass, and sloping metal roof forms to establish the architectural vernacular for the retail village. Five earth-tone masonry colors, in both split-face and smooth-face finish, were blended into the Costco warehouse and village design. More than 115,000 masonry units are woven into the design solution. The result is a vibrant and cohesive design which serves as a benchmark for future phases of the development.

This project was developed within a environmentally challenging area. Proper mitigation to wetlands and topography with water quality enhancements allowed for advancement and approval of the project.

> The success of the concept design truly lies with the overall materials palette

The over arching design goal shared by the architectural firm, MuvannyG2, and the developer, Costco Wholesale, was to achieve a cohesive architectural expression resulting in a vibrant and successful retail development and serve as a design benchmark for future development within the community.

The architectural theme was intended to have a modern and sophisticated edge to the traditional indigenous northwest vernacular. The most prominent and unifying feature of the Costco – as well as the other retail buildings – is the traditional

Hill

sloped metal roof. Beyond the shed roofs, steel structures, and accents that gesture to heavy timber construction, the success of the concept design truly lies with the overall materials palette.

The design team created master design palette from which all buildings and site elements were selected. The Costco warehouse design utilizes concrete masonry with steel, glass, and the sloping metal roof forms to establish the architectural vernacular for the retail village.

As the primary building material of this Costco project, more than 115,000 split-face and smooth-face masonry units in five earth-tone masonry colors were blended into the warehouse design.

The three-part vertical hierarchy of the warehouse envelope includes a base, body, and parapet boundary to each façade. Split-face masonry in a running bond pattern extends from finish floor to 8 feet (2.4 m). A double course of smooth-face, center-scored masonry in the same brown creates a transitional band and defines the building base. The middle section is made up of split-face units in a slightly lighter earth-tone. A smooth-face stripe in Costco "burgundy" wraps the building at 21.25 feet (6.47 m) offers an architectural cue familiar to Costco members. To complete the design of the main building walls, a cornice design using various colors and surface textures creates visual interest.

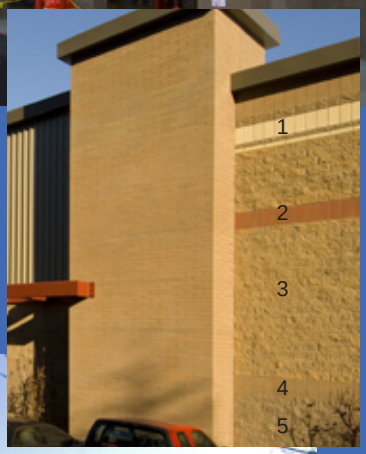

FIVE EARTH-TONE MASONRY COLORS, IN BOTH SPLIT-FACE AND SMOOTH-FACE FINISH, WERE BLENDED INTO THE DESIGN

BASED ON CITY REQUREMENTS THE DESIGN HAD TO INCORPORATE DIVERSITY ALONG THE PLANAR WALLS WITH SIGNIFICAN SHIFTS IN EACH OF THE FACADES. THE MASONRY PILASTERS AND COLUMNS CREATE DEPTH AND SHADOW.

The city requires diversity along long, planar walls with significant shifts in each of the facades. This was accomplished with masonry pilasters and columns, which define the façade compositions while creating depth and shadow. Secondarily, these vertical elements support accenting steel trellis' and canopy structures around the building. The brown masonry pilasters and columns are detailed with smooth-face, 4 inch, half-high (101 mm) units. The smaller units offer a pleasing textural and scale contrast to the primary building walls and give a brick-like finish to the warehouse design. CMD

PROJECT NAME:
Chateau Fromage
Riverside County, CA

ARCHITECT:
Platt/Whitelaw Architects, Inc.
San Diego, CA

STRUCTURAL ENGINEER:
David Wolfson, S.E.
Crestview, FL

GENERAL CONTRACTOR:
SW Homes, Inc.
Anza, CA

MASONRY CONTRACTOR:
Oates Masonry
Murrieta, CA

BLOCK PRODUCER:
RCP Block and Brick
Lemon Grove, CA

This small weekend home is located in the rural hills of Southern California at an elevation of 3200 feet (975 m). It has views to a lake and mountains beyond. The design reflects a response to the local vernacular that includes wineries, horse paddocks, and alpaca barns. The house form and layout evolved as a passive solution to the high desert climate and the site's immediate surroundings. The result is a modified "dog trot" that is designed to capture and channel breezes through the tall gallery that extends along the center the building. The gallery divides and defines the structure's functions – living areas, and sleeping areas.

The plan is angled 30° to the East-West axis to utilize the sun's capital. Overhangs are carefully sized to provide shading according to the season and time of day. West walls are further angled to maximize views and increase shading of the west-facing deck.

A vented raised foundation assists in cooling and allows construction on the sloping site without grading, keeping surrounding granite boulders in situ.

Concrete masonry units are used as the major building material for many reasons including resistance to wildfire, seismic performance, and thermal mass to temper the extreme temperatures

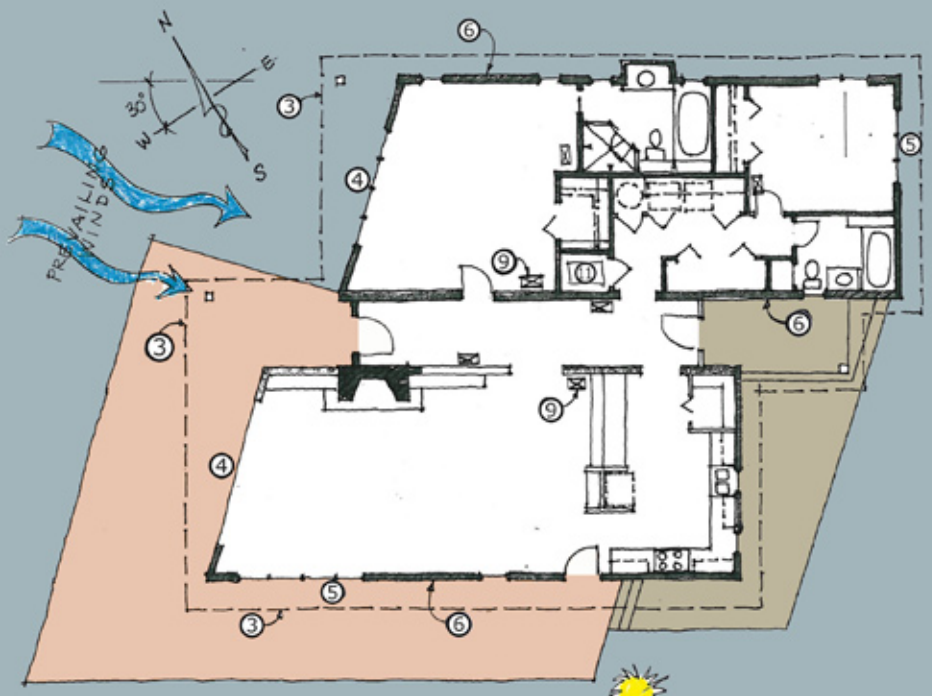

PASSIVE DESIGN SYSTEMS

ORIENTATION
1. HOUSE ORIENTED W/IN 30° OF E-W AXIS
2. MODIFIED "DOG TROT" LAYOUT TAKES ADVANTAGE OF PREVAILING WINDS

SOLAR CONTROL
3. DEEP OVERHANGS - W. & E. SIDES
4. SKEW WEST WINDOWS TO NORTH
5. WINDOWS ALL LOW 'E' DUAL GLAZING

THERMAL MASS
6. MAJOR E-W WALLS 8" CONC. MASONRY

SYSTEMS
8. CROSS + STACK VENTILATION PROVIDED
9. FLOOR LOUVERS DRAW COOL AIR FROM CRAWL SPACE
10. 'WHOLE HOUSE' FAN TO DRAW AIR THROUGH

VENTILATION
11. FUTURE WIND TURBINE TIED INTO ELEC. GRID
12. FORCED AIR HEATING SYSTEM-SUPPLY UNDER FLR.
14. PRIVATE ON-SITE SEPTIC + WELL
15. PROPANE FUELED GAS APPLIANCES

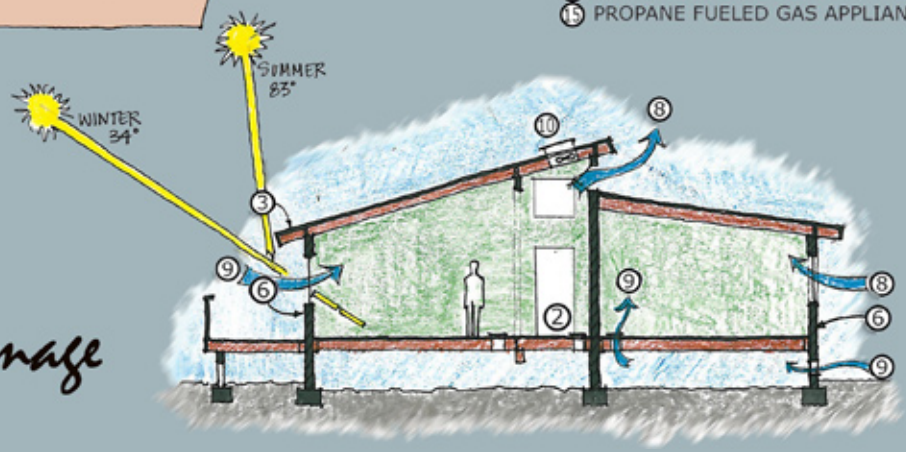

Chateau Fromage

of the high desert.

Masonry's qualities of texture and pattern are used to enhance the simple forms of the house, complementing the naturally rugged setting. Precision, single scored units create a rhythm for the exterior while interior blocks are honed for a more refined look. A masonry wall is provided at the center gallery to support the roof, increasing exposure of masonry to additional interior rooms.

The Owners are delighted with the home's passive response to the environment which allows it to nestle within its natural surroundings.

A LEEDap Architect designed this 1600 square feet (160 square meter), two bedroom home efficiently and effectively to minimize the building footprint and impact on the surrounding environment. The existing site ecology and character informed the siting, orientation, form and function of the building. The ecological goals of the project are clearly expressed in the design.

Concrete masonry units were the ideal material with which to build the structure. Overhangs and shading are carefully planned to work with the thermal mass of the masonry walls to

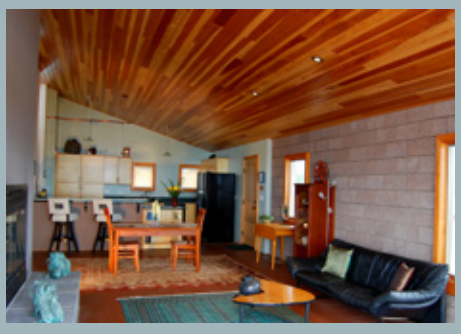

The home's passive response to the environment allows it to nestle within its natural surroundings

minimize interior temperature fluctuations. This has minimized use of the HVAC system. Masonry is also durable and low maintenance and will increase the life of the house.

The house provides indoor to outdoor connections through large windows and bi-fold doors. The central gallery is used to channel the breezes through the house. Additional passive ventilation is provided to bring air into the house through the cool crawl space. The Owners plan on installing a wind turbine by the year 2013. CMD

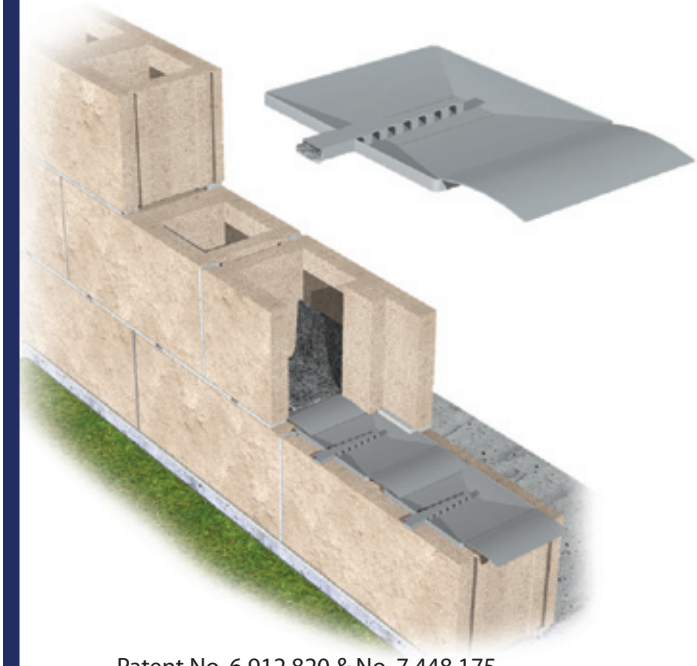

Patent No. 6,912,820 & No. 7,448,175

Through-wall flashing for single-wythe masonry walls

BLOK FLASH® by Mortar Net® USA

- Saves installation time over conventional methods
- Reduces thermal bridging, helping to maintain the wall's R-value integrity
- Eliminates the need for multiple sizes of architectural CMU
- Specified for many years by leading architects and retail chains

800-664-6638 MortarNet.com

Makers of Mortar Net® with Insect Barrier™, TotalFlash®, Blok-Flash®, BlockNet®, HouseNet®, Stone & Stucco Drain™, & Mortar Net® Weep Vents™

Mortar Net® USA LTD.

NATIONAL CONCRETE MASONRY ASSOCIATION
Sustainable Concrete Products for Structures and Hardscapes

CONCRETE MASONRY IN THE 2009 EDITION OF THE IECC

TEK 6-12D
Codes & Specs (2012)

INTRODUCTION

Although masonry is an ancient material, today's concrete masonry can be a significant benefit to modern sustainable buildings. In addition to its energy efficiency, concrete masonry is a locally-produced natural material that is durable and long-lived, minimizing the need for repair or replacement. Concrete masonry can incorporate recycled materials, and can itself be reused or recycled at the end of its life. Various architectural finishes are available that can eliminate the need for paint or other coatings which can impair indoor air quality or impede moisture control.

The *International Energy Conservation Code* (IECC) (ref. 1) serves as a written model for states, counties, cities or other jurisdictions to develop local codes for energy efficient building design. Concrete masonry construction can help meet these energy requirements, while also providing superior structural capacity, durability, and resistance to fire, sound transmission, insects and mold.

This TEK describes concrete masonry wall compliance for commercial buildings in accordance with the 2009 edition of the IECC. TEK 6-12C, *International Energy Conservation Code and Concrete Masonry*, (ref. 2) covers the 2003 and 2006 editions of the IECC. TEK 6-12E, *Concrete Masonry in the 2012 Edition of the IECC*, (ref. 12) covers the 2012 IECC.

CONCRETE MASONRY ENERGY PERFORMANCE

The thermal performance of a masonry wall depends on its steady-state thermal characteristics (described by R-value and U-factor) as well as its thermal mass (described by heat capacity). The steady-state and thermal mass performance are influenced by the size and type of masonry unit, cross-web configuration, type and location of insulation, finish materials, and density of masonry.

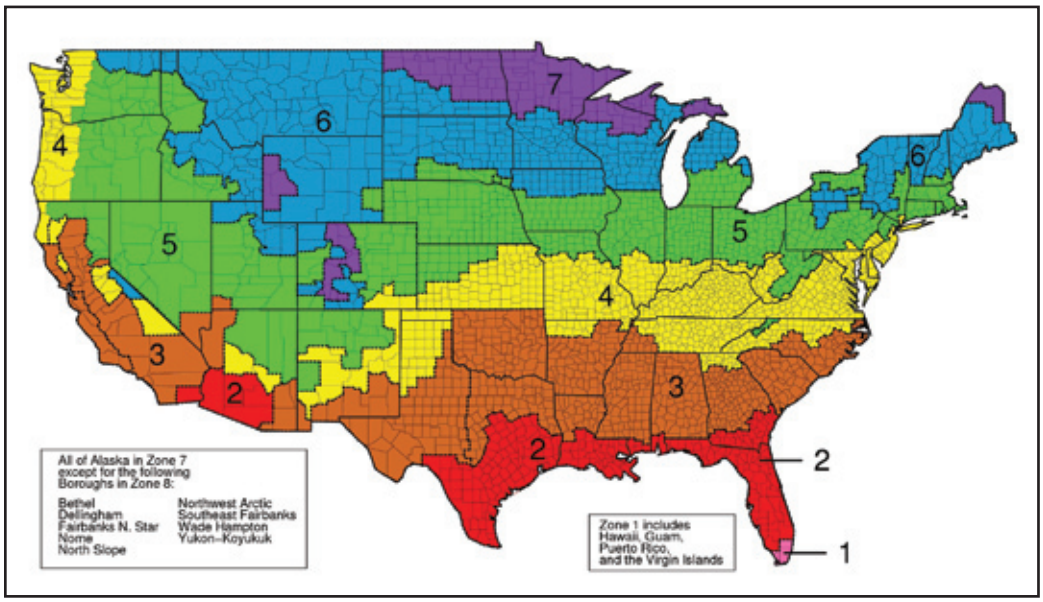

Figure 1—IECC Climate Zones

Related TEK:
6-1B, 6-2B, 6-4B, 6-9C, 6-12C, 6-12E

Keywords: ASHRAE, commercial buildings, energy codes, energy software, insulation, International Energy Conservation Code, R-value, thermal mass, U-factor

Concrete masonry units (CMU) made with lower density concrete have higher R-values (i.e., lower U-factors) than units made with higher density concrete.

Thermal mass is the ability of materials such as concrete masonry to store heat—they heat up and cool down slowly, which can help mitigate heating and cooling loads. Due to the significant benefits of concrete masonry's inherent thermal mass, concrete masonry buildings can often provide similar thermal performance to more heavily insulated frame buildings.

The benefits of thermal mass have been incorporated into energy code requirements and computer models. The IECC and ANSI/ASHRAE/IESNA Standard 90.1, *Energy Standard for Buildings Except Low-Rise Residential Buildings* (ref. 3), permit concrete masonry walls to have less insulation than frame wall systems and metal buildings to meet the energy requirements.

COMPLIANCE OPTIONS

For commercial buildings, there are three alternatives for demonstrating building energy compliance:

1. Prescriptive compliance, which requires each building envelope element to independently meet the R-value or U-factor requirements listed in IECC Table 502.1.2 or Table 502.2(1). The approach is simple to implement, but offers no design flexibility.
2. A building envelope trade-off procedure, which demonstrates that the envelope as a whole meets the energy requirements. This approach allows more design flexibility, since elements that do not meet prescriptive IECC requirements can be offset by other elements with higher performance. Although not specifically referenced in the code, COM*check* software (ref. 4) developed by the U. S. Department of Energy is a commonly accepted compliance tool for demonstrating total envelope performance.
3. A total building performance analysis, which simulates a full year of building operation. The analysis treats the entire building as a system, and accounts for virtually all aspects of building energy use, including the building envelope, mechanical systems, service water heating, and electric power and lighting. Detailed energy simulation software, such as EnergyPlus or eQuest (refs. 5, 6), is typically used when employing this option. This compliance path offers the maximum design flexibility, but requires a fairly rigorous and detailed analysis. For a project which will be LEED certified, a total building analysis is required, and the prescriptive criteria need not be met. See TEK 6-9C, *Concrete Masonry and Hardscape Products in LEED 2009*, (ref. 7) for more detailed information.

Note that a project need only comply under one of these compliance options, not all three. The following sections briefly describe prescriptive and trade-off compliance. See the design example at the end of the TEK for how these options may be implemented.

IECC PRESCRIPTIVE COMPLIANCE

Of the three compliance methods, the prescriptive method is easiest to apply. Requirements for building envelope components are listed in table format, by climate zone. Figure 1 illustrates the IECC climate zones.

Under the prescriptive option, requirements for individual elements are independent of each other. Hence, although using the prescriptive tables is very straightforward, it can also be very limiting in terms of design flexibility.

The IECC prescriptive building envelope requirements for commercial buildings (IECC section 502) list minimum energy performance criteria for roofs, above and below grade walls, slab-on-grade floors, and fenestration. The wall, roof and floor requirements are stated in terms of maximum assembly U-factor or minimum insulation R-value. The user may choose to use whichever table is more applicable to the project's assemblies.

Table 1—Prescriptive Maximum Overall Wall U-Factor Requirements (ref. 1)[A]

Climate Zone:	1	2	3	4 except marine	5 and marine 4	6	7	8
Above grade wall type:								
Mass walls	0.58	0.151	0.123	0.104	0.090	0.080	0.071	0.071
Metal building	0.093	0.093	0.084	0.084	0.069	0.069	0.057	0.057
Metal framed	0.124	0.124	0.084	0.064	0.064	0.064	0.064	0.064
Wood framed & other	0.089	0.089	0.089	0.089	0.064	0.051	0.051	0.036
Below grade walls[B]:								
All wall types	1.140	1.140	1.140	1.140	0.119	0.119	0.119	0.119

A From IECC Table 502.1.2. U-factors apply to the entire wall assembly. Only the requirements for non-residential buildings are shown.

B Values shown are C-factors, surface-to-surface conductance values, vs. U-factors, which are air-to-air conductance values.

NATIONAL CONCRETE MASONRY ASSOCIATION
Sustainable Concrete Products for Structures and Hardscapes

SAMPLING AND TESTING CONCRETE MASONRY UNITS

TEK 18-2B
Quality Assurance & Testing (2012)

INTRODUCTION

Standards for sampling and testing concrete masonry units are developed by the technical committees of ASTM International in accordance with consensus procedures. These standards reflect the expert opinion of researchers, concrete masonry manufacturers, designers, contractors and others with an interest in quality standards for concrete masonry.

The most commonly used ASTM standards for concrete masonry unit testing include: *Standard Test Methods for Sampling and Testing Concrete Masonry Units and Related Units*, ASTM C140 (ref. 1), and *Standard Test Method for Linear Drying Shrinkage of Concrete Masonry Units,* ASTM C426 (ref. 2).

SAMPLING & TESTING CONCRETE MASONRY UNITS, ASTM C140

Unit Sampling

The purpose of selecting multiple samples for unit testing is to ensure that the range of results is representative of the entire lot of units from which the specimens were taken. Consequently, concrete masonry units chosen for testing should be randomly sampled. Choosing units from one portion of a pallet, or choosing the most or least desirable units may misrepresent the properties of the lot.

Although a shipment may consist of several different unit configurations, samples for testing should all have the same configuration and dimensions. In some cases, such as shrinkage results under ASTM C426 (ref. 2), it is generally acceptable to consider the test results of one unit configuration to be representative of units with different configurations provided they were made using the same mix design, manufacturing and curing procedures.

Units that are representative of the entire lot of units are sampled from the job site or may be sampled from the manufacturer's storage inventory. Sampled units are marked with a unique identification and weighed.

Measurement of Dimensions

Unit dimensions are used: to verify that the overall length, width and height are within allowable tolerances; to calculate normalized web area and equivalent thickness; and to verify that face shell and cross web thicknesses meet the requirements of the appropriate unit specification (see Figure 1). Minimum face shell thickness is prescribed to address concerns such as ease of mortar placement, sufficient mortar coverage over joint reinforcement and resistance to lateral pressure from grouting. Minimum web thickness and area considerations include transfer of shear, flexural strength in the horizontal span, and resistance to tensile splitting of walls under compression.

New to the 2012 version of ASTM C140 is a minimum normalized web area requirement. Its purpose is to ensure that the unit has sufficient web material connecting the face shells. It replaces the equivalent web thickness criteria in previous versions of the standard. To determine the normalized web area, the minimum thickness and height of each web is measured and used to calculate the total web area of the unit. This total web area is divided by the nominal unit face area to determine normalized web area in in.^{2}/ft^2 (mm^2/m^2).

Although not specified in ASTM C140 (ref. 1), the units set aside for absorption testing are typically used for measurement of unit dimensions, before the units are immersed in water. This way, the gross volume (determined from overall unit dimensions) and the net volume (determined from water displacement) for the units are both determined from the same set of test specimens.

Absorption

Absorption describes the amount of water a unit can hold when saturated. Absorption can be an indicator of

Related TEK:
1-1F, 18-1B, 18-7

Keywords: absorption, ASTM specifications, compressive strength, coupon, dimensions, normalized web area, sampling, shrinkage, testing

the level of compaction of the concrete mix or of the volume of voids within a block. For a given mix design and manufacturing and curing process, variations in absorption can be an indication of deleterious materials in the mix, mixing quality, and/or compaction of the concrete mix, which also can indicate variations in compressive strength, tensile strength, durability, laboratory procedural problems, or other causes. Data collected during absorption testing is used to calculate absorption, density, net area, net volume and equivalent thickness.

Each unit is weighed a minimum of five times in this order: received weight; immersed weight; saturated surface dry weight; and oven-dry weight (at least twice). The saturated and immersed weights should always be determined following 24 to 28 hours of immersion and prior to oven drying the units.

Because the units are immersed in water during absorption testing, the units used for this determination should not be used for compression testing, the results of which are influenced by unit moisture content. Six units of identical size and configuration are therefore required for ASTM C140 testing—three for compression testing and three for absorption.

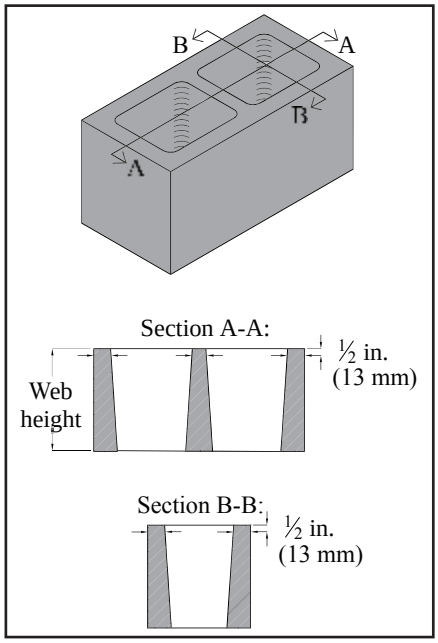

Figure 1—Measurement of Web & Face Shell Thickness

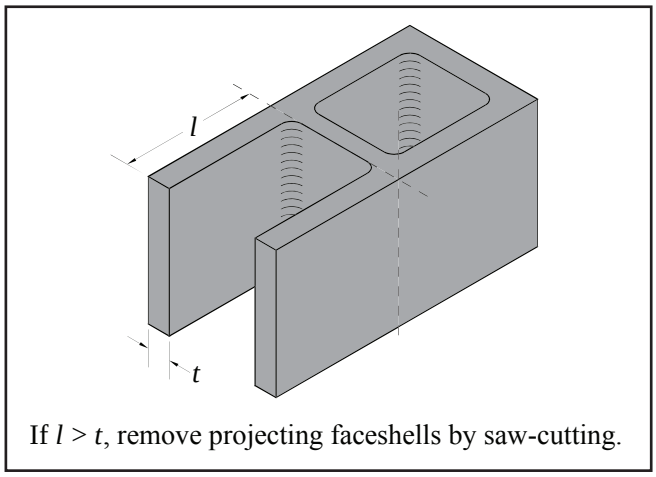

Figure 2—Units With Unsupported Projections

Compressive Strength

Compressive strength tests are used to ensure that concrete masonry units meet the minimum strength requirements of the applicable unit specification (see refs. 11). The unit compressive strength results may also be used to verify compliance with the specified compressive strength of masonry, f'_m, when using the unit strength method (ref. 4, Article 1.4 B.2.b). Unit compression tests are easier and less expensive to perform than similar tests on masonry prisms, making the unit strength method the more popular.

Some of the critical areas of compression testing that are necessary to insure accurate testing include:

- Appropriate capping stations with stiff, planar plates with smooth surfaces.
- Compression machines with spherically seated heads and bearing plates of adequate planeness and thickness for the size of the specimen being tested. See TEK 18-1B (ref. 8) for details and an example.
- Proper specimen alignment within the testing machine (center of mass aligned with center of thrust).

For compressive strength determination, three specimens are tested within 72 hours of delivery to the laboratory. Wherever possible, full-sized units are used. However, certain modifications are permitted or required as follows:

- Unsupported projections with a length exceeding the projection thickness must be removed by saw-cutting (see Figure 2). For units with recessed webs, the face shell projecting above the web is removed by saw-cutting to provide a full bearing surface over the net cross-section of the unit, as shown in Figure 3.
- When the size and/or strength of the unit exceeds the testing machine capacity, a specimen may be cut to conform to the testing machine capabilities. The resulting specimen, however, must contain an enclosed four-sided cell or cells without irregular face shells or webs.
- If saw-cutting does not produce a test specimen complying with the above provisions, coupons may be saw-cut from the face shells (see Figure 4).

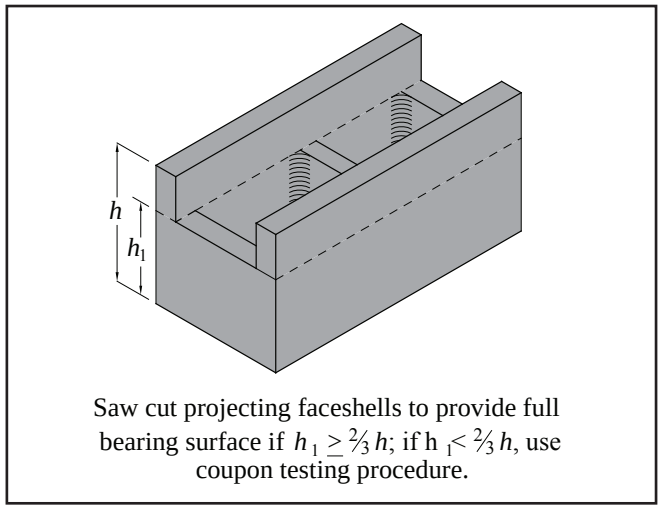

Figure 3—Units With Reduced Webs

- For concrete roof paver units, cut three test specimens from three whole paver units to produce a strip of paver with the specimen height equal to its width. Where the paver has supporting ribs, cut the coupon perpendicular to the direction of the ribs, such that any bevelled or recessed surfaces are not included in the top or bottom edges of the specimen.
- For concrete brick, specimens are required to have an aspect ratio (height divided by least lateral dimension) of 0.6 ± 0.1 (see Figure 5).

The prepared specimens are then capped in accordance with ASTM C1552 (ref. 9) to provide a uniform and level bearing surface. After the specimen center of mass is located, the specimen is positioned in the testing machine such that the specimen's center of mass is aligned with the machine's center of thrust. All hollow units are tested with their cores in a vertical direction, except for special units intended for use with their cores horizontal. These special units and units that are 100% solid are tested in the same direction as intended for service. Further information on compressive strength testing is available in references 8 and 12.

Calculations

Using the data gathered in the preceding test methods, the following characteristics are determined: absorption, density, average net area, gross area, net and gross area compressive strengths, normalized web area and equivalent thickness.

Density, or unit weight, is described in terms of dry weight per cubic foot. It is determined from the saturated weight, immersed weight and oven-dry weight. Using these weights, the volume of concrete in a unit is readily determined and its density is the oven-dry weight divided by its net volume. Among the properties affected by density of concrete in a block are wall weight, building weight, thermal conductivity, heat capacity and acoustical properties.

Cross-sectional area is the basis for expressing compressive strength of concrete masonry units. Unit specifications require that block comply with a minimum net area compressive strength. Net area is described in terms of the percentage of solid material in the cross section, and is measured by the ratio of net volume of the unit to gross volume of the unit. Because water displacement is used to determine net volume, the net cross-sectional area represents the average net area of the unit.

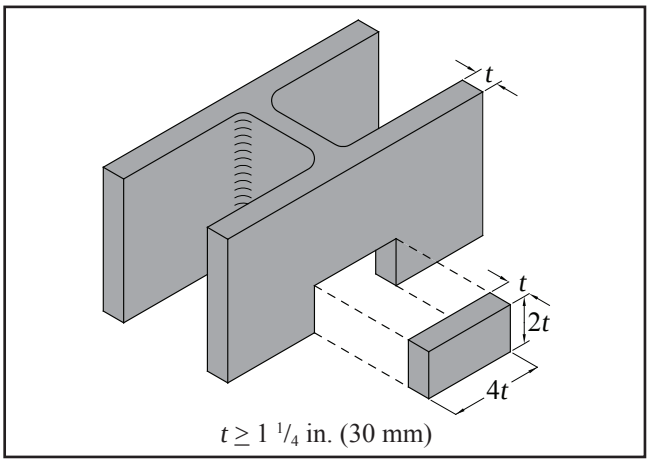

Figure 4—Coupon Requirements

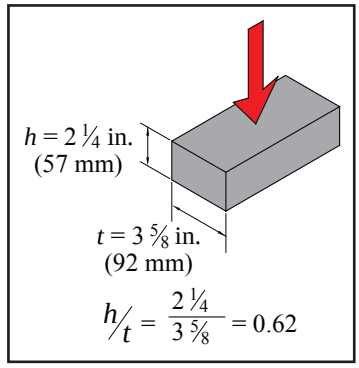

Figure 5—Compression Testing of Concrete Brick

Equivalent thickness is used to determine the fire resistance rating. It represents the average thickness of a hollow unit if the volume is configured into a solid unit of the same face dimension. It is determined by dividing the net unit volume by the unit face area.

DRYING SHRINKAGE, ASTM C426

ASTM C426, *Standard Test Method for Drying Shrinkage of Concrete Masonry Units* (ref. 2) is intended to evaluate the potential shrinkage characteristics of concrete masonry units due to moisture loss only. Note that concrete masonry may also shrink due to factors such as carbonation and temperature changes, which are not addressed by this test method (although temperature is standardized and corrected so as not to influence the results). This test measures unit length change from a totally saturated condition to an "equilibrium" condition at 17% relative humidity. This represents the potential shrinkage because the masonry is unlikely to encounter these extreme conditions under normal circumstances. The test results are used to determine concrete masonry crack control provisions.

Typically, it is not necessary to run shrinkage tests on units made with the same mix design but having different unit configurations. As long as there are no changes in materials, mix design, production methods or curing, ASTM C426 tests are required to be performed only once every two years, per ASTM C90 (ref. 13).

Test specimens are usually whole units with measurements taken on both faces. Alternatively, coupons may be cut from face shells, as illustrated in Figure 6. Gage plugs are mounted on the test specimens to facilitate length measurements.

This method requires the test specimens to be saturated for 48 hours, at which time the length is precisely measured and recorded. Specimens are then dried in an oven for 5 days. After drying, specimens are cooled and measured. Test specimens are then returned to the drying oven for periods of 48 hours until the length change is negligible.

PREFACED UNITS

For concrete masonry units with a smooth, resinous tile-like facing adhered to the unit, *Standard Specification for Prefaced Concrete and Calcium Silicate Masonry Units*, ASTM C744 (ref. 3) includes requirements and applicable test methods for the facing. The concrete masonry unit to which the facing is

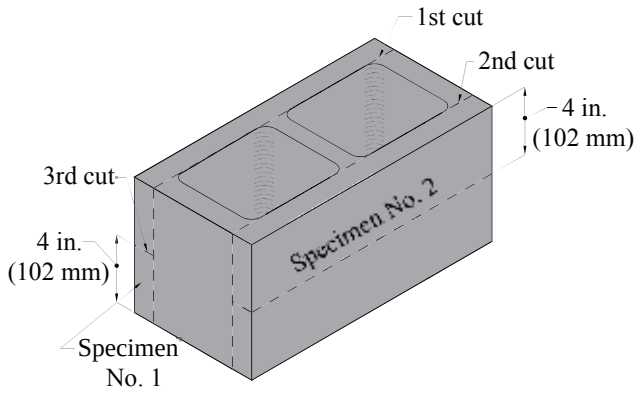

View of sawed block showing a suggested sequence of cuts and location of two half-faceshell specimens.

Figure 6—Linear Drying Shrinkage Specimens

applied must comply with the applicable unit specification. Facing requirements include:

Resistance to crazing—Units are subjected to wetting and drying to demonstrate that the facing does not craze, crack or spall.

Resistance to chemicals—The facing must remain unchanged when subjected to the specified list of chemicals and exposure durations.

Adhesion—The facing must remain adhered to the unit when the unit is loaded to failure by an applied compression load.

Abrasion—The wear index of the facing must exceed 130 when the facing is subjected to a standard abrasion test (ASTM C501, ref. 5).

Surface burning—The flame spread and smoke density rating of the facing must not exceed 25 and 50, respectively, when tested in accordance with ASTM E84 (ref. 6).

Color tint & texture—The facing texture must remain unchanged and facing color difference must not exceed 5 Delta units (ref. 7) when subjected to an accelerated weathering test.

Soiling and cleansability—No more than a trace of stain may remain on the facing after cleaning when subjected to a specified list of marking substances.

REFERENCES

1. *Standard Test Methods for Sampling and Testing Concrete Masonry Units and Related Units*, ASTM C140-12. ASTM International, 2012.
2. *Standard Test Method for Linear Drying Shrinkage of Concrete Masonry Units*, ASTM C426-10. ASTM International, 2010.
3. *Standard Specification for Prefaced Concrete and Calcium Silicate Masonry Units*, ASTM C744-11. ASTM International, 2011.
4. *Specification for Masonry Structures*, TMS 602-11/ACI 530.1-11/ASCE 6-11. Reported by the Masonry Standards Joint Committee, 2011.
5. *Standard Test Method for Relative Resistance to Wear of Unglazed Ceramic Tile by the Taber Abraser*, ASTM C501-84(2009). ASTM International, 2009.
6. *Standard Test Method for Surface Burning Characteristics of Building Materials*, ASTM E84-12. ASTM International, 2012.
7. *Standard Practice for Calculation of Color Tolerances and Color Differences from Instrumentally Measured Color Coordinates*, ASTM D2244-11. ASTM International, 2011.
8. *Evaluating the Compressive Strength of Concrete Masonry*, TEK 18-1B. National Concrete Masonry Association, 2011.
9. *Standard Practice for Capping Concrete Masonry Units, Related Units and Masonry Prisms for Compression Testing,* ASTM C1552-09a. ASTM International, 2009.
10. *Standard Specification for Concrete Building Brick*, ASTM C55-11. ASTM International, 2011.
11. *ASTM Specifications for Concrete Masonry Units*, TEK 1-1F. National Concrete Masonry Association, 2012.
12. *Compressive Strength Testing Variables for Concrete Masonry Units*, TEK 18-7. National Concrete Masonry Association, 2004.
13. *Standard Specification for Loadbearing Concrete Masonry Units*, ASTM C90-11b. ASTM International, 2011.

NCMA and the companies disseminating this technical information disclaim any and all responsibility and liability for the accuracy and the application of the information contained in this publication.

NATIONAL CONCRETE MASONRY ASSOCIATION
Sustainable Concrete Products for Structures and Hardscapes

NATIONAL CONCRETE MASONRY ASSOCIATION
13750 Sunrise Valley Drive, Herndon, Virginia 20171
www.ncma.org

To order a complete TEK Manual or TEK Index, contact NCMA Publications (703) 713-1900

In the IECC prescriptive tables, concrete masonry walls fall under the *Mass Wall* category, which is defined as walls weighing at least 35 psf (171 kg/m^2), or 25 psf (122 kg/m^2) if the material weight is not more than 120 lb/ft^3 (1,900 kg/m^3).

Prescriptive Compliance via Overall Wall U-Factor

The 2009 IECC prescriptive U-factor requirements for above and below grade walls are shown in Table 1.U-factor is numerically the inverse of R-value. So, a wall with an overall R-value of 10 h·ft$^{2\cdot o}$F/Btu (1.76 m$^{2\cdot o}$K/W) has a U-factor of 0.10 Btu/h·ft$^{2\cdot o}$F (0.568 W/m$^{2\cdot o}$K) and vice-versa.

Using the U-factor criteria, rather than the insulation R-values discussed below, allows walls without continuous insulation (such as concrete masonry with insulated cores) to comply prescriptively. The U-factor compliance table may also be a good option for concrete masonry walls with proprietary inserts, or other walls that have better thermal performance than that assumed in the code.

NCMA TEKs 6-2B, *R-Values and U-Factors of Single Wythe Concrete Masonry Walls*, and 6-1B, *R-Values of Multi-Wythe Concrete Masonry Walls*, as well as the *Thermal Catalog of Concrete Masonry Assemblies* (refs. 8, 9, 10) list R-values, and in some cases U-factors, for a wide variety of concrete masonry walls.

Prescriptive Compliance via Insulation R-Value

Table 2 shows minimum insulation R-value requirements for above grade walls. These R-values apply to the insulation only, regardless of the underlying wall's R-value.

In the table "ci" means continuous insulation. There is a widespread misconception that all walls must have continuous insulation in order to meet the IECC. In fact, continuous insulation is required only to comply with this particular table – other compliance options are available, including compliance via the prescriptive U-factor table discussed above, and COM*check*, discussed below.

Note that in Climate Zone 2, the IECC includes an exception for single wythe concrete masonry walls with insulated cores. Where the table requires R5.7 continuous insulation, the IECC allows concrete masonry walls with ungrouted cells filled with insulation such as vermiculite, perlite or foamed-in-place (with a thermal conductivity less than or equal to 0.44 Btu-in./h·ft$^{2\cdot o}$F, or R-value per inch $\geq$ 2.27 (63.4 W·mm/m$^{2\cdot o}$K)) to comply, as long as the amount of grouting does not exceed 32 in. (813 mm) o.c. vertically and 48 in. (1,219 mm) o.c. horizontally. The exception allows the majority of single wythe ungrouted and partially grouted concrete masonry walls containing insulation in the ungrouted cells to comply with the IECC, regardless of that wall's R-value.

TRADE-OFF COMPLIANCE USING COM*check*

The trade-off option allows the user to demonstrate compliance based on the building envelope as a whole, rather than on the prescriptive component-by-component basis. These trade-offs are most often implemented using easy-to-use software, such as COM*check* (ref. 4).

There are two main benefits to using trade-off software for compliance rather than prescriptive tables. First, the

Table 2—Prescriptive Wall Insulation R-Value Requirements (ref. 1)[A]

Climate Zone:	1	2	3	4 except marine	5 and marine 4	6	7	8
Above grade wall type:								
Mass walls	NR[B]	R5.7ci[C]	R7.6 ci	R9.5ci	R11.4ci	R13.3ci	R15.2ci	R25ci
Metal building	R16	R16	R19	R19	R13 + 5.6ci	R13 + 5.6ci	R19 + 5.6ci	R19 + 5.6ci
Metal framed	R13	R13	R13 + 3.8ci	R13 + 7.5ci	R13 + 7.5ci	R13 + 7.5ci	R13 + 7.5ci	R13 + 7.5ci
Wood framed & other	R13	R13	R13	R13	R13 + 3.8ci	R13 + 7.5ci	R13 + 7.5ci	R13 + 15.6ci
Below grade walls:								
All wall types	NR[B]	NR[B]	NR[B]	NR[B]	R7.5ci	R7.5ci	R7.5ci	R7.5ci

[A] From IECC Table 502.2(1). R-values apply only to the insulating materials used. Only the requirements for non-residential buildings are shown. NR = no requirement. ci = continuous insulation (note that walls without continuous insulation can comply via U-factor requirements (Table 1) or COM*check*).

[B] Insulation is not required, i.e., an uninsulated concrete masonry wall complies.

[C] Concrete masonry single wythe exception applies: ASTM C90 concrete masonry, grouted up to 32 in. o.c. vertically and 48 in. o.c. horizontally, with ungrouted cores filled with insulation, is deemed to comply.

user gains design flexibility because parameters such as increased glazing area can be offset by increasing roof or wall insulation. Second, once the basic building data is entered into the program and saved, design changes or building location can be quickly modified, and compliance immediately redetermined.

More detailed information on using COM*check* for concrete masonry buildings can be found in TEK 6-4B, *Energy Code Compliance Using COMcheck* (ref. 11).

DESIGN EXAMPLE

Consider a "big-box" retail building in St. Louis, MO (Climate Zone 4). For aesthetics and durability, the designer opts for single wythe core-insulated 12-in. (305-mm) concrete masonry walls with an overall wall R-value of 6.3 Btu/h·ft^{2}·^{o}F (1.11 m^{2}·^{o}K/W).

The first step is to check if the walls comply using one of the prescriptive compliance options, since they are the easiest to implement. Table 1 shows an above grade mass wall requirement of U0.104 h·ft^{2}·^{o}F/Btu (0.59 W/ m^{2}·^{o}K), which corresponds to a wall R-value of 9.6 Btu/h·ft^{2}·^{o}F (1.69 m^{2}·^{o}K/W). The R6.3 wall does not meet this requirement, nor can Table 2 be used because core insulation does not qualify as continuous insulation.

Using COM*check*, however the building can easily comply, by increasing the roof insulation from R20 (prescriptive minimum) to R22.3. See TEK 6-4B for more information on compliance using COM*check*.

BUILDING ENVELOPE AIR LEAKAGE REQUIREMENTS

Air leakage requirements in the IECC are mandatory regardless of which compliance option is used. The 2009 IECC building envelope air leakage requirements are the same as previous editions of the code: essentially, requiring openings and penetrations to be sealed or gasketed compatible with the construction materials and location. Sealing materials spanning joints between construction materials need to accommodate the anticipated expansion and contraction of the construction materials.

REFERENCES

1. *International Energy Conservation Code*. International Code Council, 2009.
2. *International Energy Conservation Code and Concrete Masonry*, TEK 6-12C. National Concrete Masonry Association, 2007.
3. *Energy Standard for Buildings Except Low-Rise Residential Buildings*, ANSI/ASHRAE/IESNA Standard 90.1-07. ASHRAE, Inc. and Illuminating Engineering Society of North America, American National Standards Institute, 2007.
4. COM*check*, version 3.9.0. United States Department of Energy, http://www.energycodes.gov/comcheck/download.stm.
5. EnergyPlus, United States Department of Energy, http://apps1.eere.energy.gov/buildings/energyplus/register.cfm?goto=eplus.
6. eQuest, Energy Design Resources, http://www.energydesignresources.com/resources/software-tools/equest.aspx.
7. *Concrete Masonry and Hardscape Products in LEED 2009*, TEK 6-9C. National Concrete Masonry Association, 2009.
8. *R-Values and U-Factors of Single Wythe Concrete Masonry Walls*, TEK 6-2B. National Concrete Masonry Association, 2009.
9. *R-Values of Multi-Wythe Concrete Masonry Walls*, TEK 6-1B. National Concrete Masonry Association, 2009.
10. *Thermal Catalog of Concrete Masonry Assemblies*, TR233. National Concrete Masonry Association, 2010.
11. *Energy Code Compliance Using* COM*check*, TEK 6-4B. National Concrete Masonry Association, 2012.
12. *Concrete Masonry in the 2012 Edition of the IECC*, TEK 6-12E. National Concrete Masonry Association, 2012.

NCMA and the companies disseminating this technical information disclaim any and all responsibility and liability for the accuracy and the application of the information contained in this publication.

NATIONAL CONCRETE MASONRY ASSOCIATION
Sustainable Concrete Products for Structures and Hardscapes

NATIONAL CONCRETE MASONRY ASSOCIATION
13750 Sunrise Valley Drive, Herndon, Virginia 20171
www.ncma.org

To order a complete TEK Manual or TEK Index, contact NCMA Publications (703) 713-1900

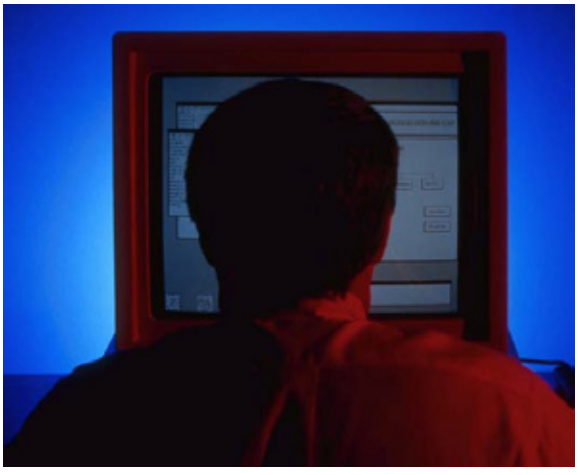

SAVE TIME AND MONEY WITH DIRECT DESIGN

Design a structure in 15 minutes

Using the IBC-referenced standard Direct Design Handbook for Masonry Structures (TMS 403), a new software package has been created that allows users to generate final structural designs for whole concrete masonry buildings in a matter of minutes, not days or weeks. The Direct Design Software is based on the Direct Design Handbook by TMS (NCMA order number TR232). The handbook is a consensus design standard referenced by the International Building Code and the International Residential Code. It provides a simplified procedure for the structural design of concrete masonry structures for both reinforced and unreinforced masonry.

Direct Design Software Version 1

Based on the Direct Design Handbook by TMS (TR232) and completed in January 2012, this new tool fully unlocks the power of the Direct Design approach. The tedium of table lookups and repetition of simple steps is now fully automated, as is the detailing of every block, bar, and control joint. NCMA and Ensoltech, Inc. (2012). **Free trial download from www.ncma.org.**

Direct Design Handbook for Masonry Structures

Developed by The Masonry Society's Design Practices Committee as a consensus standard and written in mandatory language for referencing in a legally adopted building code. This Handbook provides a direct, simplified procedure for the structural design of 8-inch concrete masonry structures for both reinforced and unreinforced masonry. Addresses the following mapped service level loads: snow up to 60 lb/ft2 (2.9 kPa) and basic wind speeds up to 150 mph (241 kph). Also included are mapped seismic 0.2 second spectral response accelerations up to 1.5g, and mapped seismic 1.0 second spectral response accelerations up to 3.0g. 130 pages (2010).

DOWNLOAD A 30-DAY FREE TRIAL, FULL-WORKING VERSION OF THE SOFTWARE FROM NCMA.ORG

To purchase the software or the handbook, call the NCMA publications department 703-713-1900

Software (DDSNv1):
Member: $349.00
Professional: $495.00
Retail: $700.00

Handbook (TR232):
Member: $45.00
Professional: $49.00
Retail: $90.00

Combo Software + Direct Design Handbook (DDSNv1*):
Member: $375.00
Professional: $525.00
Retail: $750.00

More New Software! *Structural Masonry Design System Ver. 5*

Concrete masonry and clay masonry software for allowable stress design and strength design according to '95-'08 TMS 402/ACI 530/ASCE 5 or the 2000-'09 IBC . Includes reinforced and unreinforced walls, shear walls, columns, lintels, custom face shell thicknesses, interaction diagrams and much more. S&H charges will apply to CD Version. A free trial version is available at www.ncma.org as well as free webinars on how to use the software by co-author Russ Brown.

NEW VERSION - Download (CMS10V5) and CD (CMS10V5CD)
Member: $199.00.....Professional:$279.00.....Retail: $399.00

UPGRADE FROM VERSION 4.0 - Download (CMS10V4U) and CD (CMS10V4UCD)
Member: $99.00.....Professional: $139.00.....Retail: $199.00

FREE TRIAL DOWNLOAD AND MORE AVAILABLE AT WWW.NCMA.ORG

What is the minimum required compressive strength for masonry mortars?

Simply put, there are no minimum compressive strength requirements for field-batched masonry mortar in any current ASTM standard or building code provision. There are, however, minimum compressive strength requirements for masonry mortars prepared and tested in the laboratory in accordance with ASTM C270.

The two primary ASTM standards covering masonry mortar testing include:

- ASTM C270 Standard Specification for Mortar for Unit Masonry
- ASTM C780 Standard Test Method for Preconstruction and Construction Evaluation of Mortars for Plain and Reinforced Unit Masonry

Section 5.2.6 of ASTM C 780 states:

> 5.2.6 Compressive strength testing of molded mortar cylinders and cubes allows establishment of the strength developing characteristics of the mortar. The measured strength is dependent upon the mortar water content at the time of set, along with other factors, and reflects the general strength that would be attained by the mortar in the masonry. The measured value shall not, however, be construed as being representative of the actual strength of the mortar in the masonry. Due to specimen shapes—cylinders versus cubes—the strength results between the two different-shaped specimens of identical mortar will vary.

Similarly, Section 3 of ASTM C 270 states:

> 3. Specification Limitations
> 3.1 Specification C 270 is not a specification to determine mortar strengths through field testing.
> 3.2 Laboratory testing of mortar to ensure compliance with the property specification requirements of this specification shall be performed in accordance with 5.3. The property specification of this standard applies to mortar mixed to a specific flow in the laboratory.
> 3.3 The compressive strength values resulting from field tested mortars do not represent the compressive strength of mortar as tested in the laboratory nor that of the mortar in the wall. Physical properties of field sampled mortar shall not be used to determine compliance to this specification and are not intended as criteria to determine the acceptance or rejection of the mortar (see Section 8).

In practice, the compressive strength requirements for masonry mortar contained in ASTM C270 are often misapplied to field-batched mortar. As stated in Section 3 of C 270, the compressive strength values in that standard are only to be applied to laboratory prepared mortar. In part, the intent of compressive strength testing of field-batched mortar in accordance with ASTM C780 is to document the consistency of the mortar properties throughout a project. As the title of ASTM C780 implies, testing in accordance with C780 applies to both preconstruction and construction testing of masonry mortars. When the property specification (i.e., compressive strength) of ASTM C270 is used to specify a mortar for a project, preconstruction evaluation of the mortar would allow for the mortar to be batched using both standardized laboratory procedures and field methods to compare and evaluate the physical properties resulting from each mortar set.

Laboratory batching of masonry mortar is not intended to simulate field-batched mortar, but instead to provide a standardized means of comparing the influence of varying proportions of mortars materials, the addition of an admixture, and similar variables. In addition to the differences in batching procedures between laboratory- and field-prepared mortars, the amount of water added to each mix can differ significantly. In the field, additional water is intentionally added to the mortar mix so that when the plastic mortar is placed onto a masonry unit, the water absorbed from the mortar by the unit will not 'dry-out' the mortar before it has a chance to cure. When this field mortar is selected for compressive strength testing and placed in a non-absorbent mold, the water-to-cement ratio remains artificially elevated during curing, unlike the mortar placed on masonry units, which has had the free water removed due to unit absorption. Laboratory mortar batched, conversely, is intentionally batched to a low water-to-cement ratio to simulate the absorption characteristics of masonry units. When molded into compression specimens, the laboratory mortar will always have a higher compressive strength compared to field mortar as a result of the lower water-to-cement ratio.

ASTM has recently published *ASTM C1586 Guide for Quality Assurance of Mortar* that provides additional guidance regarding the interpretation of testing values for field sampled mortars and explains why the compressive strength of sampled mortar, either from the laboratory or from the field, is not considered to be equal to the compressive strength of the mortar in the wall. At this time, there are no standardized means of directly evaluating the compressive strength of cured mortar samples taken from a wall.

NCMA MEETING SCHEDULE

Draft Schedule as of 5/22/2012

WEDNESDAY, AUGUST 22

8:00am – 6:00pm	NCMA Registration/Hospitality
9:00am – 1:00pm	NCMA Executive Committee
1:00pm – 2:00pm	NCMA Convention Education Subcommittee
1:30pm – 3:30pm	NCMA/ICPI Joint Plant QC Certification Task Group
1:30pm – 2:30pm	NCMA Safety Awards Program Task Group
4:00pm – 6:00pm	NCMA Town Hall
6:30pm – 8:00pm.	NCMA/ ICPI Joint Member Reception

THURSDAY, AUGUST 23

6:30am - 5:00pm	NCMA Registration & Hospitality
7:30am – 9:30am	NCMA Foundation Program Review Committee
8:00am – 10:00am	NCMA SRW Marketing Subcommittee
9:00am – 11:00am	NCMA Spouse/Guest Welcome Breakfast & Book Talk
9:30am – 10:30am	NCMA Foundation National Endowment Council
10:00am – 11:00am	NCMA Articulated Concrete Block Subcommittee
10:30am – 12:00pm	NCMA Foundation Investment/Finance Committee
10:30am – 12:00pm	NCMA Associate Member Division Board
1:00pm – 2:30pm	NCMA SRW Contractor Subcommittee
2:30pm – 4:30pm	NCMA SRW Technical Subcommittee
3:30pm – 5:00pm	NCMA Foundation Board of Trustees
4:30pm – 6:30pm	NCMA Product Development & Creative Concepts Forum and Unit Design Competition & Student Design Presentations and Awards
6:30pm – 9:30pm	NCMA Past Chairmen's Dinner

FRIDAY, AUGUST 24

7:00am – 5:00pm	NCMA Registration & Hospitality
7:00am – 8:00am	NCMA Council of Past Chairmen of the Board
8:00am – 9:30am	NCMA Small Business/Family Business Forum
8:00am – 12:00pm	NCMA Masonry Technical Subcommittee
9:30am – 11:00am	NCMA Membership Recruitment Committee
9:00am – 10:00am	NCMA Spouse/Guest Breakfast
12:00pm – 2:00pm	NCMA Business Lunch
2:00pm – 3:30pm	NCMA Government Affairs Committee
2:00pm – 3:30pm	NCMA SRW and Hardscape Products Committee
2:00pm – 3:00pm	NCMA Education and Training Committee
4:00pm – 5:30pm	NCMA Membership Dues & Bylaws
4:00pm – 5:30pm	NCMA Masonry Committee
6:30pm – 8:00pm	NCMA PAC Reception

SATURDAY, AUGUST 25

7:00am – 10:00am	NCMA Registration & Hospitality
7:00am – 9:00am	NCMA Executive Committee
10:30am – 12:30pm	NCMA Board Meeting
1:00pm – 6:00pm	NCMA/ ICPI Networking Golf Tournament

REGISTRATION
WWW.NCMA.ORG

2011 Safety Award Winners

The annual NCMA/ICPI Safety Awards Program recognizes safety-conscious Producer and Associate members of the National Concrete Masonry Association (NCMA) and the Interlocking Concrete Pavement Institute (ICPI), as evidenced by exemplary safety records. Each year the awards are presented during the annual convention and ICON EXPO.

This year's awards program was a banner year for safety! With a record number of entries (147), a record number of Milestone recipients (10) and a record number of Platinum (zero incidents) winners (125). The awards reporting period was January 1, 2011 – December 31, 2011. Our hats are off to these companies for placing such a high standard on their facility safety records!

Milestone Award Winners

This highly coveted award is bestowed only upon those NCMA or ICPI Producer and Associate member facilities with multi consecutive years of Safety Awards Program entries with ZERO OSHA (or equivalent Canadian injury report) recordable injuries. The Milestone Award recognizes Five, Eight and Ten years of achievement. This award represents the top of the elite among the safety conscious companies! Five (5) consecutive years of zero recordable injuries from 2007–2011

Anchor Block Company • Anchor Mold & Tool Company
Basalite Concrete Products, LLC • Sparks
Hardscapes USA • Defuniak Springs
Meade Concrete Products, Inc. • Block Plant
Northfield, an Oldcastle Company • Romeoville
Oldcastle APG West • Oldcastle Stockton
Oldcastle APG West • Portland Location
Oldcastle Arthur Whitcomb • West Lebanon
OldcastleCoastal, Inc. • Fort Pierce
Superlite Block, Inc., an Oldcastle Company • Needles

All remaining NCMA and ICPI Producer and Associate member entries are eligible for the second-tier awards recognizing the highest level of safety for non-zero recordable injuries by facility, based on five categories of hours worked. The categories are:
Category I = 0 – 40,000 hours
Category II = 40,001 – 80,000 hours
Category III = 80,001 – 140,000 hours
Category IV = 140,001 – 200,000 hours
Category V = 200,001+ hours

Gold Award Winners

Company Name	Facility Name	Category
Oldcastle Anchor	Leesburg	I
Oldcastle Bonsal American	Auburndale	I
Besser	Holland	II
Midwest Block & Brick	Kansas City, MO	II
Oldcastle Anchor	Lyndhurst	II
Anchor Block Company	Anchor Block South Plant	III
Basalite Concrete Products	Basalite Denver	III
Featherlite Building Products	Round Rock - 707	III
Kirchner Block & Brick	Bridgeton, MO	III
Oldcastle Anchor	Easton	III
Oldcastle Central Pre-Mix	Spokane Location	III
Oldcastle Northfield	Mundelein	III
Oldcastle Anchor	Trenwyth, York	IV
Besser	World Headquarters	V
Oldcastle Adams	Oldcastle Adams - Greensboro	V
Shouldice Designer Stone	Shouldice Designer Stone	V

Silver Award Winners

Company Name	Facility Name	Category
Besser	California	I
General Shale Brick, Inc.	Louisville Block	I
Besser	Montreal	II
Oldcastle Miller	Bonner Springs	II
Basalite Concrete Products,	Basalite Dixon	V

Key: Producer Member Associate Member

Platinum Award Winners

This prestigious award, the highest level of safety achievement in a single year, is given to NCMA or ICPI Producer or Associate member facilities with ZERO OSHA (or equivalent Canadian injury report) recordable injuries during the award reporting period.

Company Name	Facility Name	Hours Worked
Anchor Block Company	Zenith Products Division	15,861
Anchor Block Company	Anchor Mold & Tool Company	13,030
Basalite Concrete Products, LLC	Columbia Roof Tile	20,696
Basalite Concrete Products, LLC	Basalite Sparks	37,554
Basalite Concrete Products, LLC	Basalite Selma	36,976
Basalite Concrete Products, LLC	Basalite Portland	9,292
Basalite Concrete Products, LLC	Basalite Boise	52,394
Basalite Concrete Products, LLC	Basalite Corona (Simmons Brk)	45,094
Basalite Concrete Products, LLC	Basalite DuPont	95,864
Basalite Concrete Products, LLC	Basalite Carson	101,197
Block USA	Anniston Block Plant	15,906
Block USA	Birmingham Office and Yard	29,930
Block USA	Carrollton Block Plant	2,999
Block USA	Cartersville Block Plant	34,838
Block USA	Defuniak Springs Block Plant	30,293
Block USA	Dothan, AL Plant	20,375
Block USA	Fayetteville Block Plant	4,648
Block USA	Hardscapes USA-Defuniak Springs, FL	23,813
Block USA	Panama City, FL Plant	6,827
Block USA	Sylacauga	5,651
Block USA	Theodore, AL Plant	52,322
CalStar Products, Inc.	Caledonia Plant	46,699
CEMEX	Bushnell Block Mfg.	40,000
CEMEX	Charlotte Block	14,822
CEMEX	Colfax Block	13,519
CEMEX	Davenport	6,654
CEMEX	Four Corners Arch Mfg.	10,877
CEMEX	Franklin Block	5,670
CEMEX	Hendersonville Block	8,808
CEMEX	Hickory Block	5,899
CEMEX	Holly Hill Paver Plant	10,895
CEMEX	Naples Mgf Plant 4089/4090	14,499
CEMEX	Palmetto Mfg	13,024
CEMEX	Riviera Beach 1179	9,239
CEMEX	Spartanburg Block	17,575
CEMEX	Spartanburg Paver Plant	7,365
CEMEX	Sweetwater Mfg.	17,611
CEMEX	Winter Park Mfg.	11,072
CEMEX	Zephyrhills Mfg. 1207	11,741
CEMEX	South Jacksonville Manufacturing	5,713
CEMEX	Waters Avenue Block Plant	13,451
Featherlite Building Products	Converse - 706	30,292
Featherlite Building Products	Lubbock - 703	21,801
Featherlite Building Products	Port Neches - 713	15,541
Featherlite Building Products	Dallas - 726	40,151
General Shale Brick, Inc.	Cheyenne Block	24,375
General Shale Brick, Inc.	Colorado Springs Block	28,558
General Shale Brick, Inc.	Moncure Block	14,620
Hinkle Block & Masonry Products	Richmond, KY. Plant	13,659
Hinkle Block & Masonry Products	Somerset, KY Plant	14,378
Kirchner Block & Brick	Earth City, MO	37,453
Meade Concrete Products, Inc.	Block Plant	47,243
Midwest Block & Brick	Nattinger-Springfield-Atlantic St.	39,680
Midwest Block & Brick	Paducah-Long	32,515
Midwest Block & Brick	Springdale, AR	35,917
Midwest Block & Brick	McCarty St	75,124
Oldcastle Adams	Oldcastle Adams - Castle Hayne	27,111
Oldcastle Adams	Oldcastle Adams - Dunn	68,723

Oldcastle Adams	Oldcastle Adams - Rockwood	74,136
Oldcastle Adams	Oldcastle Adams - Morrisville	183,442
Oldcastle Anchor	Phillipsburg	18,827
Oldcastle Anchor	Winchester	39,708
Oldcastle Anchor	Crofton	51,870
Oldcastle Anchor	East Petersburg	62,678
Oldcastle Anchor	Farmingdale	43,795
Oldcastle Anchor	Gainesville	61,034
Oldcastle Anchor	Holbrook	76,479
Oldcastle Anchor	West Lebanon	44,710
Oldcastle Anchor	Fishers	81,883
Oldcastle Arch. (Groupe Permacon)	Ottawa	20,581
Oldcastle Arch. (Groupe Permacon)	Sherbrooke	16,626
Oldcastle Arch. (Groupe Permacon)	Décor	77,411
Oldcastle Arch. (Groupe Permacon)	Trois-Rivieres	63,400
Oldcastle Big River	Livlite Division	92,357
Oldcastle Big River	Gravelite Division	102,462
Oldcastle Bonsal American	Calverton	35,490
Oldcastle Bonsal American	Cincinnati	22,058
Oldcastle Bonsal American	Dallas	16,900
Oldcastle Bonsal American	Jacksonville	30,016
Oldcastle Bonsal American	Jonesboro	6,429
Oldcastle Bonsal American	La Mirada	9,283
Oldcastle Bonsal American	Lilesville	32,930
Oldcastle Bonsal American	New Boston	10,651
Oldcastle Bonsal American	Oxford	27,799
Oldcastle Bonsal American	Conley	69,852
Oldcastle Bonsal American	Franklin Park	62,665
Oldcastle Bonsal American	Fredonia	61,928
Oldcastle Bonsal American	White Marsh	77,375
Oldcastle Bonsal American	Pompano Beach	91,172
Oldcastle Bonsal American	Tampa	84,800
Oldcastle Central Pre-Mix	Kent Location	39,962
Oldcastle Central Pre-Mix	Portland Location	19,897
Oldcastle Coastal	Orlando Plant	36,365
Oldcastle Coastal	Valkaria Plant	11,244
Oldcastle Coastal	West Palm Beach Plant	39,588
Oldcastle Coastal	Fort Pierce Plant	42,194
Oldcastle GMS	Augusta	13,293
Oldcastle GMS	Cornelia	16,459
Oldcastle GMS	Macon	17,511
Oldcastle GMS	Jonesboro	57,987
Oldcastle GMS	Tyrone	82,010
Oldcastle Jewell	Waco	118,435
Oldcastle Miller	85th Street	20,622
Oldcastle Miller	Des Moines	29,758
Oldcastle Northfield	Berea	16,119
Oldcastle Northfield	Midland	18,738
Oldcastle Northfield	Romeoville	9,217
Oldcastle Northfield	Indianapolis	65,005
Oldcastle Northfield	Sheffield	45,966
Oldcastle Northfield	West Bend	50,030
Oldcastle Sierra	Stockton	50,453
Oldcastle Superlite	Albuquerque	24,921
Oldcastle Superlite	Darling Mine	6,237
Oldcastle Superlite	Deer Valley	11,156
Oldcastle Superlite	Gilbert	24,610
Oldcastle Superlite	Needles	7,927
Oldcastle Superlite	Santa Fe Block	13,613
Oldcastle Superlite	Santa Fe Mine	2,658
Oldcastle Superlite	Yuma	11,875
Oldcastle Superlite	Highland	44,417
Oldcastle Superlite	Trenwyth Industries	62,936
Oldcastle Superlite	Tucson	44,491
Tarmac America	Edgewater Conc Blk Mfg Plant	12,390
Tarmac America	Fort Pierce Conc Blk Mfg Plant	14,109
Tarmac America	Orlando Conc Blk Mfg Plant	21,429

NEWS

ASSOCIATION NEWS

NCMA BOARD OF DIRECTORS

The Board convened on March 3 at the conclusion of all other association meetings, addressing more than 40 action and advisory items recommended by various NCMA committees. Chairman Don Gordon of Atlas Block Company has completed his term and will be transitioning into the role of Immediate Past Chair while Steven "Rocky" Fizzano of Fizzano Brothers Concrete Products assumes the lead role of Chairman of the Board for the coming year. Charles Newsome of Johnson Concrete Company was nominated as the incoming Chairman-Elect. Additional transitions on NCMA's Board of Directors include:

Incoming:

- William Witherow, Region I
- Kurt Trump, Region II
- Patrick Sauter, Region IV
- Thomas Finch, Region V
- Paul Croushore, AMD
- Bob Whisnant, Appointed Director

Outgoing:

- Mark Wilhelms, Past Chair
- Paul Valentine, Region IV
- Dennis Hite, Region V
- Grady Gunn, Amd
- Bill McHugh, Masonry Committee

NCMA HONORS LIFETIME ACHIEVEMENT OF JIM ANDEREGG

At its annual convention, the NCMA recognized the career achievements of James Anderegg, part owner and past president of the Mutual Materials Company of Bellevue, Wash. Anderegg joined Mutual Materials in the late 1980's and was instrumental in leading the company's growth throughout the Northwest through acquisitions and greenfelding manufacturing facilities. Anderegg brought to the industry a solid engineering background as a structural engineer with experience in both aviation and auto manufacturing. He has been a strong advocate for both improving manufacturing processes for materials made by his own company, but also for improving the way that masonry and hardscape products are designed and used, fghting for appropriate representation in building codes and standards. Joe Bowen, current president of Mutual Materials presented the award, which was accepted on Anderegg's behalf by his daughter, Kendall Anderegg, vice-president of sales and distribution for Mutual Materials. Notes of congratulations can be emailed to janderegg@mutualmaterials.com.

SAVE THE DATE - NCMA 2012 MID-YEAR MEETING

NCMA will conduct the 2012 Midyear meeting at the Grand Traverse Resort in Traverse City, Michigan, August 22 – 25 in conjunction with the Interlocking Concrete Pavement Institute's (ICPI) Summer Meeting. Hotel reservations can be made by calling 800-968-7352. The group guest room rate at the hotel is $199, plus an $11.95 resort fee. The Midyear Meeting serves as the forum for important committee program planning, budgeting and priority setting activities.

NEW MEMBERS

PRODUCER MEMBER

- **Concrete Products Limited,** a division of Pennecon Concrete. Joe Blundon, General Manager, jblundon@pennecon.com, 709-368-3171. Concrete Products Limited has expanded and modernized its Block Production Facility to a state-of-the-art, fully automatic system. The company manufactures products in three major categories: Masonry Block, Keystone Retaining Wall Units, and Concrete Paving Stones. It is also a distributor for several companies including: Brampton Brick, Oaks Pavers, Snapedge Canada, and Strata Geogrid. For additional information, visit www.pennecon.com. Sponsor: Paul Hargest, Boehmers/Hargest Block Ltd.

ASSOCIATE MEMBER

- **Argos USA** - Bill Kjorlien, Alpharetta, Georgia, will continue actively serving on several NCMA committees, and can be reached at bkjorlien@argos-us.com or 404-307-5992. Argos USA is a high-quality cement and ready-mixed concrete company serving North Carolina, South Carolina, Georgia, Virginia, Texas and Arkansas. Ts. Sponsored by: Jef Speck, Big River Industries. For more information on Argos USA visit www.argos-usa.com.

Contact NCMA's meetings department for additional information (703)713-1900.

DATES ANNOUNCED FOR THE 2013 PRECAST SHOW FEATURING ICON EXPO AND THE NCMA ANNUAL CONVENTION

The 2013 Precast Show dates have been moved to January 11-13 in Indianapolis, Indiana. The date change also reflects a pattern change to a Friday/Saturday/Sunday show. The Precast Show will once again feature ICON EXPO with a masonry and hardscapes pavilion. The National Concrete Masonry Association will hold its annual convention in conjunction with the show beginning on January 10. NCMA will be conveniently headquartered at the Indianapolis Downtown Marriott Hotel located adjacent to the Indiana Convention Center. More information will be posted on the ICON EXPO website at www.

MEMBERS IN THE NEWS

Big River Industries – Big River Industries has updated their website. The new site is Bigriverindustries.com. The development team has gone to considerable effort to ensure that the site is easy to navigate and that it provides the visitor with information critical to their decision making process. New Internal Curing information can be accessed at http://bigriverindustries.com/index.php/literature/internal-curing. A new Literature Library is available with brochures in PDF format.

Bonsal American Inc. — Bonsal American Inc., an Oldcastle® Company, announced that it has acquired the TXI Package Products business of TXI Operations, LP, a subsidiary of Texas Industries Inc., which is based in Dallas.

Concrete Block Insulating Systems - CBIS will be able to produce 80% of the factory's energy thanks to 1500 panel solar power system recently installed on their roof. Visit www.masslive.com for more information.

Holcim's Deem Recognized for Lifetime Achievement - The National Ready Mixed Concrete Association recognized Peter Deem, retired from Holcim (US), this week at their annual board of directors meeting. "It is a great honor to be recognized by the NRMCA," said Deem. "I'm proud of my work promoting industry cooperation and Holcim's leadership in this endeavor. Cross-collaboration is integral to our work, and the future of the concrete industry."

Johnson Concrete - Hardscapes among fastest growing segment that Johnson Concrete offers. When construction of schools, hospitals and prisons slowed to a trickle during the recession, Johnson Concrete entered the outdoor living space market. Three years later, hardscapes now make up between 10 percent and 15 percent of the business, Executive Vice President Charles Newsome said. Visit www.salisburypost.com for more information.

Senior US management changes at CRH - CRH plc, the international building materials group, announces a number of changes within its management team in the United States, effective from Feb. 20, 2012. Doug Black, currently chief executive of CRH's Americas Materials Division, is appointed to the newly created position of president and chief operating officer, Oldcastle, Inc., the holding company for CRH's operations in the Americas. He will report to Mark Towe, chief executive officer of Oldcastle.

Smith Rejoins Besser Company - Besser Company is pleased to welcome longtime industry veteran David Smith to the Besser customer service team. David assumes the role of sales and technical support representative covering Florida, Georgia, Alabama and Mississippi effective 1 March.

Taylor Concrete Products receives OSHA SHARP recognition - Taylor Concrete Products, Inc. has been accepted in the Occupational Health and Safety Administration's (OSHA) SHARP Program, joining an elite group of only 75 New York State businesses to hold the honor and only one of two companies from Jefferson County to do so. The Safety and Health Achievement Recognition Program (SHARP) recognizes small, private sector employers that operate an exemplary safety and health management system. Acceptance into SHARP by OSHA singles out a business amongst its peers as a model of worksite safety and health. As a SHARP certified facility, Taylor Concrete will be exempt from programmed OSHA inspections for 12 months.

iconexpo.org as it becomes available.

NCMA ONLINE LEARNING IS AFFORDABLE AND AVALIBLE 24/7

Scheduling schools at NCMA headquarters in previous years was very popular but financially demanding and time consuming. In an effort to make training easier and more readily available, recordings of many of the topics addressed at those schools are now available online for a very modest fee of $20. There also are a number of presentations available at no charge. For a complete list of courses, descriptions and access, go to https://ncmameetings.webex.com and click on "Recorded Sessions" under "Attend a Session" in the left column. A credit or debit card will be required for the registration fee to view any of the presentations that have a charge. By the end of this summer, recordings of the NCMA AIA/LA CES presentations complete with AIA and LA learning units will be available as well. For more information, contact Dennis Graber, director of technical publications.

PRESENT YOUR PRODUCT AT THE NCMA PRODUCT DEVELOPMENT AND CREATIVE CONCEPTS FORUM

NCMA's Product Development and Creative Concepts Forum (PDCC) recognizes and advances the development of new and existing concrete masonry products, methods of production, innovative block and brick designs, and systems integration within the concrete masonry and concrete hardscape industries. This popular forum is where your best ideas can be presented free of charge to your most important audience, potential licensee producers and distributors. The deadline for new applications is June 30, 2012. Contact the NCMA PDCC Liason for more informaion, 703-713-1900.

FOUNDATION NEWS

RAFFLE RAISES FUNDS FOR NCMA, ICPI, AND NPCA FOUNDATIONS

Close to 350 Raffle tickets were sold throughout The Precast Show and the drawing was held just before the closing of the show on Saturday, March 3 at 2:45pm. Representatives from the three association foundations were on hand, as well as sponsors: Basalite Concrete Products, Hess Machinery, Midwest Block & Brick, Besser Company. Joe Bowen, foundation chair of ICPI was the emcee and conducted the drawing of the winning ticket. William Schneider of Aqua-Paving Construction in Montgomery, IL held the winning ticket and elected to turn over a portion of his $5,000 prize to the NCMA and ICPI foundations. All raffle proceeds benefit the foundations. Thank you to everyone who participated!

NEW FOUNDATION GRANTS AWARDED AT ANNUAL MEETING

The NCMA Foundation Board of Trustees considered 20 new grant requests and approved 9 of them for a total of $84,500 in new research and student design competition grants for 2012, including:

1. Student Design Competition, Florida Atlantic University $7,669
2. Student Design Competition, Ball State University $6,500
3. BIM for Masonry to David Biggs $8,000
4. TMS Sustainability eNews-The Masonry Society $2,400
5. In-Plane Shear Capacity Partial Grout-Brigham Young University $12,400
6. Sample Templates of CM Plant EMS-Applied Safety Management $12,500

These additions bring total new Foundation grant awards to $182,650 for the year. Progress reports on $246,000 in prior years' outstanding grants were also reviewed. The Board also approved the 2010 annual audit and a $350,000 budget for 2012. The John & Marlene Heslip Scholarship Fund is now in place with a $30,000 endowment.

GOVERNMENT AFFAIRS NEWS

CAROLINAS DELEGATION CALLS ON LEGISLATORS TO SUPPORT CHECK-OFF PROGRAM

The Carolinas Concrete Masonry Association coordinated a delegation of industry representatives from North Carolina and South Carolina as well as Virginia to visit Capitol Hill in May. The

objective of the meetings was to solicit the support of congressmen and senators from their districts and states, respectively, to support the introduction of legislation that would authorize the concrete masonry industry to pursue a checkoff program and conduct an industry referendum that would be needed to create the program. In total, 23 offices were visited, 15 with the elected representative themselves. "This initiative is critical for the future success of our industry," said Charles Newsome of Johnson Concrete. "I would strongly urge all of the State Associations to make the trip to Washington as soon as possible to see their elected officials. The power of one on one meetings with the Congressmen and their staff has much more influence than a letter, email or phone call." For more information on organizing a similar delegation visit, contact Clare Ramminger of the CMU Checkoff Program, cramminger@cmucheckoff.com

INDUSTRY NEWS

UNIVERSITY PROFESSORS' MASONRY WORKSHOP

The University Professors' Masonry Workshop (UPMW) is a forum to allow faculty teaching masonry to come together to learn from one another and from industry members about the design, specification, construction, and evaluation of masonry, and effective ways to teach this information to their students. The goal of the UPMW is simple: to assist in providing knowledgeable future designers and construction managers that are comfortable with masonry. The 2012 UPMW will be held on June 12-14 at California Polytechnic State University in San Luis Obispo. For more informaion please visit www.masonrysociety.org.

HNA REGISTRATION OPENS JUNE 1

Online registration for Hardscape North America (HNA) will open June 1, 2012. The tradeshow is set for Wednesday – Friday, October 24-26, at the Ky. Exposition Center in Louisville. HNA, which is produced by the Interlocking Concrete Pavement Institute (ICPI) and endorsed by the Brick Industry Association (BIA) and NCMA, is co-located with GIE+EXPO, the Green Industry & Equipment Expo, to comprise the 9th largest tradeshow in America. Together, the shows offer 750 exhibitors indoors and outside in a 19-acre demonstration area. Early-bird registration fees for hardscape contractors and distributors start at $35 until September 12. To learn more about the show, please visit www.hardscapena.com.

NEW IGCC AVAILABLE

The 2012 International Green Construction Code will increase the energy efficiency of structures, while providing direction and oversight of green design and construction, according to the International Code Council. The 2012 IgCC was developed at public hearings with input from experts in code development and enforcement, architecture, engineering, building science, environmental advocacy, government, business, academia and the public. The code acts as an overlay to the existing set of International Codes, including provisions of the International Energy Conservation Code and ICC-700, the National Green Building Standard and incorporates ASHRAE Standard 189.1 as an alternate path to compliance.

Replacing Curtains?
Consider our lightweight, all-aluminum doors.
- No more velcro
- Immediate energy savings
- 100% cure-rate up next to door
- Doors seal EVERY TIME!
- One man "Open & Close" operation

We have been manufacturing doors since 1904 with unsurpassed quality and longevity.
Stop losing money through your curtains. Seal your opening with a real door!
UNIVERSAL DOOR CARRIER INC.
317-241-3447
www.universaldoor.com

LOCKDOWN with CoreLock (Pat. pending)
the Secured Rebar Positioner

Available for 8" and 12" block!

- *Corelock is "seated" 1.25" deep into core.*
- *Eliminates movement of positioner during block installation.*
- *Diagonal placement in core insures rebar is always automatically centered.*
- *Does not interfere with wire reinforcement.*

WIRE-BOND®

Charlotte, NC
800.849.6722

Memphis, TN
800.441.8359

www.wirebond.com

INNOVATION IN MASONRY CONSTRUCTION

OMNIA ENGINEERING

SAVE FUEL, INCREASE YIELDS WITH CONSOLIDATED UNIT

Complete Vapor Curing Systems Heats Mixing Water, Heats the Plant
Highest Efficiencies, Lowest Cost

Get the Facts
1-800-477-8482
www.omniaconcrete.com

Steel Block Pallets

r3 Steel

New name on the block w/20 years experience

A sus órdenes en Español

Geoff Ridder / Samara Wilson 303.679.0003
Glen Reynolds / Dustin Reynolds 903.856.9000
www.r3steel.com sales@r3steel.com

world class equipment and world class service!

microwave moisture measurement for the concrete industry

Hydronix

692 W. Conway Rd., Suite 24
Harbor Springs, MI 49740
Tel: (231) 439-5000
Fax: (231) 439-5001
Toll-free in USA and Canada
(888) 887-4884

www.hydronix.com

SURE-KLEAN®

Custom Masonry Cleaner • Burnished Custom Masonry Cleaner • Concrete Brick Cleaner

for post-construction cleandown of architectural concrete masonry

- Removes mortar smears, efflorescence
- Improves color depth and uniformity
- Toll-free telephone technical support
- Industry-best nationwide field support

PROSOCO
SINCE 1939

A Magazine Archive is Available at www.ncma.org

THE ORIGINAL
www.careercrete.com
Block | Paver | Pipe | Precast | Ready Mix

CONCRETE INDUSTRY ASSOCIATES
EMPLOYMENT AGENCY

PO Box 954
Grand Haven, MI 49417
Tel: 616-842-0227
E-mail: geb@careercrete.com

member of NATIONAL CONCRETE MASONRY ASSOCIATION

Have You Taken Advantage of all the resources available on the NCMA web site?

- e-TEK
- Bookstore
- Design Resources
- TEK Technical Information
- Research Reports
- Metric Design Guidelines
- Energy Code Options for CMU
- Sustainability Information
- Technical Services
- Technical Publications Database
- Fire and Acoustics
- Design Awards Program
- Marketing Resources
- Articles for Print and Radio
- Camera Ready Artwork
- Fire Safety Materials
- Mold Materials
- Print Ads
- Safety Resources
- eSafetyLine Software
- Opportunities/Leads
- Helpful Links
- Fire Safety Associations
- Mold Resources
- Workforce Development

VISIT TODAY
www.ncma.org

Marketplace

• Steel Racks
• Steel Pallets

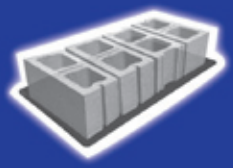

D & M WELDING CO.

Domestic & Worldwide Service.

• Steel Products
• Sand Hoppers

Our company has the experience you are looking for! We have been producing Steel Pallets & Steel Racks since 1973 and are former Concrete Block Producers.

Jeff McCarroll ■ 800 • 860 • 6065 ■ 937 • 293 • 5404 Fax
■ dmwelding@att.net

iwi group L.L.C.

member of CM National Concrete Masonry Association · NPCA · American Concrete Pipe Association

Never climb into your mixer again!

Heavy Hitter Long Reach Chisel Scaler

Can extend to 5 feet with included pipe extensions!

Phone: (800) 247-2819 or (770) 840-7060
sales@iwigroup.com www.iwigroup.com

BLOCK AND PAVER INDUSTRY SPECIALIST
NATIONWIDE SEARCH & RECRUITMENT

• OPERATIONS AND PLANT MANAGERS
• SHIFT SUPERVISORS • MACHINE OPERATORS
• MAINTENANCE • SALES

UNITED EMPLOYMENT GROUP, INC.

Michael S. Stauffer • 610-351-8070 • Cell: 610-417-5503
mstauffer@UnitedEmploymentGroup.com

www.UnitedEmploymentGroup.com

ALABAMA PALLETS

"Your Dependable and Experienced Steel Pallet and Rack Source for the Concrete Block and Paver Industry"

Mike Crancer
Phone: (636) 861-7300
Toll Free: (888) 530-7337
Fax: (636) 861-7335
E-mail: mcrancer@msn.com
www.steelpallets.org

STRATA
Global GeoSolutions

- **HIGHEST QUALITY GEOGRIDS**
- **BEST CUSTOMER SERVICE**
- **COMPETITIVE PRICES**

WWW.GEOGRID.COM

Marketplace Ads are Affordable and Effective.

Let NCMA design one for YOU.
For advertising information, call NCMA 703-713-1900.

Continuing Education Learning Program

AIA, LA CES, and Professional Development Hours (PDH) Learning Units Quiz

MAY/JUNE 2012

To receive one learning unit, read "NCMA/ICPI Design Award Winner, Award of Excellence - Pavers" and "Production History of Segmental Retaining Wall Units", and complete the questions on this page. Return forms before June 2013 to receive learning unit credits.

Questions (Circle the correct answer)

1. What system is used in the Palmetto Bay Village Hall project to manage the storm water?
   a. Asphalt
   b. Pavers
   c. Permeable pavers

2. The water on the Palmetto Bay Village Hall project _____.
   a. Infiltrates in the soil below the pavers
   b. Is evacuated from the site thorough storm sewers
   c. Is harvested to be reused in the site

3. What is the minimum standard SRW units require to meet?
   a. ASTM C90
   b. ASTM C1372
   c. ASTM C33

4. What are the dimensional tolerances specified on ASTM C1372 for SRWs?
   a. +/- 1/8 inch
   b. +/- ¼ inch
   c. No dimensional tolerances exist

5. What is the maximum height block produced on zero slump machines?
   a. 8 inches
   b. 12 inches
   c. 16 inches

6. Which architectural finish is not common on SRW units?
   a. Abraded
   b. Soft split
   c. Glazed

7. Recycled content cannot be incorporated to segmental retaining wall units
   a. True
   b. False

8. Segmental Retaining Wall units are manufactured to meet a minimum compressive strength of _____ on non-transportation projects
   a. 3,000 psi (20.7 MPa)
   b. 1,900 psi (13.1 MPa)
   c. 1,000 (6.9 MPa)

9. Modular SRW units can be used where geogrid cannot be accommodated
   a. True
   b. False

10. SRWs were developed as alternatives to:
    a. Boulder retaining walls
    b. Timber walls
    c. Cast in place retaining walls
    d. All of the above

Information

Name _____

Address _____

City _____

State/Province _____ Zip Code _____

Phone _____ Fax _____

E-mail _____

ID Number _____
(list all that apply, if applicable - AIA, ASLA, CLARB, or CSLA)

☐ I certify that I have complied with Continuing Education Guidelines and that the above information is true and accurate to the best of my knowledge.

Request Certificate of Completion:

☐ **AIA**

☐ **LA CES**

☐ **PDH**

Send completed quiz to:

National Concrete Masonry Association,
13750 Sunrise Valley Drive,
Herndon, VA 20171-4662,
or fax to NCMA at 703-713-1910.

If you have questions,
please contact NCMA at 703-713-1900.

CONCRETE MASONRY DESIGNS

13750 Sunrise Valley Drive
Herndon, VA 20171-4662

A PUBLICATION OF
NATIONAL CONCRETE MASONRY ASSOCIATION
WWW.NCMA.ORG

May | June 2012

A WALL, IS A WALL... IS A WOW!

If your client wants more than an ordinary retaining wall, select VERSA-LOK. No other wall system gives you the same combination of aesthetics, installation ease and performance. VERSA-LOK's unique construction gives you the freedom to create stairs, curves, corners, columns and freestanding walls. Units can be quickly modified on site — eliminating the need to order special pieces. And their solid-unit characteristics provide unsurpassed durability. In addition, the Weathered™ texture and Mosaic® random-pattern options will give your project a look that is sure to turn heads.

To find out why customers prefer VERSA-LOK, call **(800) 770-4525** or visit **www.versa-lok.com**.

Freestanding Walls | *Mosaic Random Face Patterns* | *Fully Integrated Stairs* | *Random-Pattern Tall Walls* | *Freestanding Columns* | *Multi-Angle Corners*

VERSA-LOK®
Retaining Wall Systems
Solid Solutions.™

© 2008 Kiltie Corporation • Oakdale, MN